Owner's Manual

Operation and Care

INSTALLER: Leave this manual with party responsible for use and operation.
OWNER: Retain this manual for future reference.

Contact your dealer with questions on installation, operation, or service.

***NOTICE: DO NOT** discard this manual!*

MAJESTIC

Model(s):

ASH42-B

UL LISTED

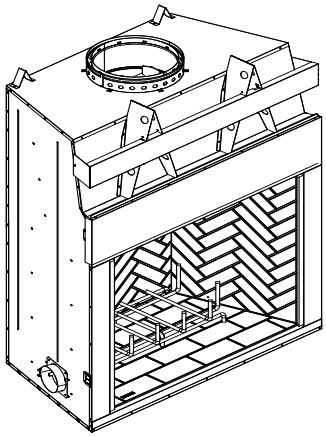

WOODBURNING FIREPLACE

Installation and service of this appliance should be performed by qualified personnel. Hearth & Home Technologies recomends HHT Factory Trained or NFI certified professionals.

hearthED FACTORY TRAINING Fuel Your Fire

NFI NATIONAL FIREPLACE INSTITUTE A CERTIFICATION AGENCY

⚠WARNING: If the information in these instructions is not followed exactly, a fire or explosion may result causing property damage, personal injury, or death.

- **DO NOT** store or use gasoline or other flammable vapors and liquids in the vicinity of this or any other appliance.
- **DO NOT** overfire. Overfiring will void your warranty.
- Comply with all minimum clearances to combustibles as specified. Failure to comply may cause house fire.

⚠ WARNING

HOT SURFACES!
Glass and other surfaces are hot during operation AND cool down.

Hot glass will cause burns.
- **DO NOT** touch glass until it is cooled
- NEVER allow children to touch glass
- Keep children away

- CAREFULLY SUPERVISE children in same room as fireplace.
- Alert children and adults to hazards of high temperatures.

High temperatures may ignite clothing or other flammable materials.
- Keep clothing, furniture, draperies and other flammable materials away.

⚠WARNING

Fire Risk.

For use with solid wood fuel only.
Other fuels may overfire and generate poisonous gases (i.e. carbon monoxide).

Safety Alert Key:

- ***DANGER!*** Indicates a hazardous situation which, if not avoided will result in death or serious injury.
- ***WARNING!*** Indicates a hazardous situation which, if not avoided could result in death or serious injury.
- ***CAUTION!*** Indicates a hazardous situation which, if not avoided, could result in minor or moderate injury.
- ***NOTICE:*** Indicates practices which may cause damage to the fireplace or to property.

Table of Contents

1 Welcome
- A. Congratulations 3
- B. LIMITED LIFETIME WARRANTY 4

2 Product Specific and General Information
- A. Appliance Certification 6
- B. Vented Gas Log Sets, Gas Inserts, Gas Log-lighters and Wood-burning Inserts 6

3 Important Safety and Operating Information
- A. Fireplace Safety 7
  - 1. Clear Space 7
  - 2. Grate 8
  - 3. Molded Brick Panel 8
  - 4. Firescreen 8
  - 5. Flue Damper 8
  - 6. Glass Doors 8
  - 7. Over-Firing Your Fireplace 8
  - 8. Chimney Fire 8
- B. General Operating Parts 9
  - 1. Flue Damper 10
  - 2. Outside Air 10
  - 3. Glass Doors 10
- C. Fuel 11
  - 1. Hardwood vs. Softwood 11
  - 2. Moisture content 11
  - 3. Seasoning 12
  - 4. Storing Wood 12
  - 5. Burning Process 12
  - 6. Creosote Formation 12
- D. Processed Solid Fuel Firelogs 12
- E. First Fire 12
- F. Lighting Instructions 13

4 Maintenance and Service
- A. Chimney Inspection 14
- B. Creosote (Chimney) Cleaning 14
- C. Grate 15
- D. Glass Cleaning 15
- E. Ash Removal 15
- F. Refractory 15

5 Troubleshooting
- A. FAQs 16

6 Reference Materials
- A. Service Parts 19
- B. Accessories 22
- C. Contact Information 23

1 Welcome

Read this manual before operating this fireplace.
Please retain this owner's manual for future references.

A. Congratulations

Congratulations on selecting a HHT wood burning fireplace. The HHT fireplace you have selected is designed to provide the utmost in safety and reliability.

As the owner of a new fireplace, you'll want to read and carefully follow all of the instructions contained in this Owner's Manual. Pay special attention to all Cautions and Warnings.

This Owner's Manual should be retained for future reference. We suggest that you keep it with your other important documents and product manuals.

Your new HHT wood burning fireplace will give you years of durable use and trouble-free enjoyment. Welcome to the HHT family of fireplace products!

Local Dealer Information

DEALER: *Fill in your name, address, phone and e-mail information here and fireplace information below.*

Dealer Name: _____

Address: _____

_____

Phone: _____

E-mail: _____

Fireplace Information:

Brand: _____ Model Name: _____

Serial Number: _____ Date Installed: _____

Listing Label Information/Location

The model information regarding your specific fireplace can be found on the rating plate usually located on the smoke shield or column.

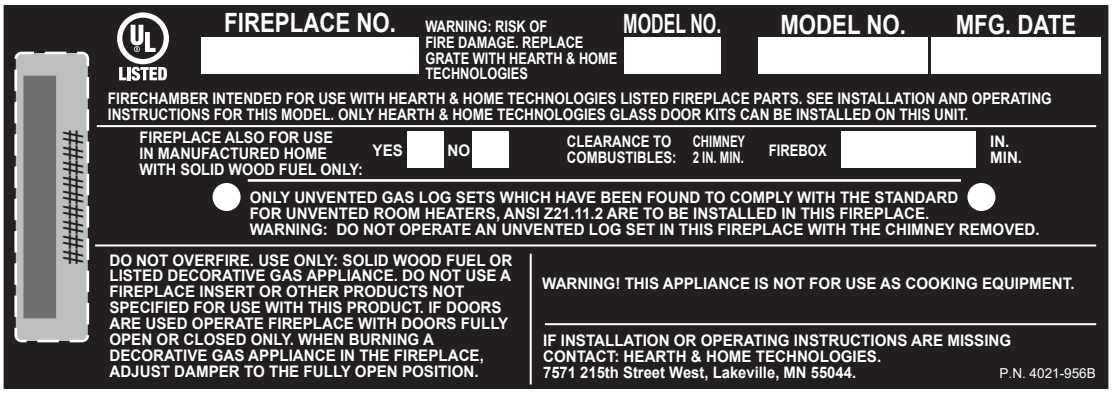

B. LIMITED LIFETIME WARRANTY

Hearth & Home Technologies LLC

LIMITED WARRANTY

Hearth & Home Technologies LLC ("HHT") extends the following warranty for HHT gas, wood, pellet and electric hearth appliances (each a "Product" and collectively, the "Product(s)") and certain component parts set forth in the table below ("Component Part(s)") that are purchased from a HHT authorized dealer or distributor.

WARRANTY COVERAGE:

HHT warrants that the Products and their Component Parts will be free from defects in materials and workmanship for the applicable period of Warranty coverage set forth in the table below ("Warranty Period"). If a Product or Component Parts are found to be defective in materials or workmanship during the applicable Warranty Period, HHT will, at our discretion, repair the applicable Component Part(s), replace the applicable Component Part(s), or refund the purchase price of the applicable Product(s). The maximum amount recoverable under this Warranty is limited to the purchase price of the Product. This Warranty is transferable from the original purchaser to subsequent owners, but the Warranty Period will not be extended in duration or expanded in coverage for any such transfer. This Warranty is subject to conditions, exclusions, and limitations as described below.

WARRANTY PERIOD:

Warranty coverage begins at the date of installation. In the case of new home constructions, Warranty coverage begins six months after invoice of the final sale of the Product(s) by an independent, authorized HHT dealer or distributor. However, the Warranty coverage shall commence no later than 24 months following the date of Product shipment from HHT, regardless of the installation or purchase date.

Warranty Period		HHT Manufactured Appliances and Venting				
Component Parts	Labor	Gas	Pellet	Wood	Electric	Component Parts Covered by this Warranty
1 Year		X	X	X		All parts including handles, external enameled components and other material except as covered by Warranty Conditions, Warranty Exclusions, and Warranty Limitations listed
2 Years					X	All parts except as covered by Warranty Conditions, Warranty Exclusions, and Warranty Limitations listed
			X	X		Glass, Electrical components limited to heating element/igniters, Top feed auger assembly, Blowers, Junction Box, Remotes/Wall switches, linear actuator, power cord, vacuum switch, snap disc, wire harnesses and thermocouple
		X				Electrical components limited to modules, remotes/wall switches, valves, pilots, blowers, junction boxes, wire harnesses, transformers and lights (excluding light bulbs)
		X		X		Cement Refractory Panels, Glass Liner Panels
3 years			X			Firepots, burnpots, Harman mechanical feeders
5 years		X		X		Catalysts, Vented and Vent Free burners and logs
10 years	1 year	X				Burners, logs and metal/fiber refractory components of HHT manufactured fireplaces or stoves, venting due to poor workmanship
10 years	3 years		X	X		Castings, Medallions & Baffles, FlexBurn® System (engine, inner cover, access cover and fireback), Firebox and heat exchanger, HHT Chimney & Terminations, Manifolds
20 years	3 years	X				Firebox and heat exchanger
All purchased replacement parts and optional accessories						
1 Year	None	X	X	X	X	All purchased replacement parts and optional accessories

4021-645N 12/23

Page 1 of 2

WARRANTY CONDITIONS:

- Because HHT cannot control the quality of any Products sold by unauthorized sellers, this Warranty only covers Products that are purchased through an HHT authorized dealer or distributor unless otherwise prohibited by law; a list of HHT authorized dealers is available on the HHT branded websites.
- This Warranty is only valid while the applicable Product remains at the site of original installation.
- This Warranty is only valid in the country in which the HHT authorized dealer or distributor that sold the applicable Product is authorized to sell applicable Product.
- Contact your installing distributor or dealer for Warranty service. If the installing dealer or distributor is unable to provide necessary parts, contact the nearest HHT authorized dealer or supplier. Additional service fees may apply if you are seeking Warranty service from a dealer other than the dealer from whom you originally purchased the applicable Product.
- No HHT consumer should bear cost of warranty service or costs incurred while servicing warranty claims (i.e., travel, gas, or mileage) when the service is performed within the terms of this Warranty. Check with your dealer or distributor in advance for any costs to you when arranging a warranty call. Travel and shipping charges for parts are not covered by this Warranty.

WARRANTY EXCLUSIONS:

This Warranty does not cover the following:

- Changes in surface finishes as a result of normal use. As a heating appliance, some changes in color of interior and exterior surface finishes may occur. This is not a flaw and is not covered under the Warranty.
- Damage to printed, plated, or enameled surfaces caused by fingerprints, accidents, misuse, scratches, melted items or other external sources and residues left on the plated surfaces from the use of abrasive cleaners or polishes.
- Repair or replacement of parts that are subject to normal wear and tear during the Warranty Period are not covered. These parts include: paint, wood and pellet gaskets, firebricks, wood grates, flame guides, batteries and the discoloration of glass.
- Minor expansion, contraction, or movement of certain parts causing noise. These conditions are normal and complaints related to this noise are not covered by this Warranty.
- Damages resulting from: (1) failure to install, operate, or maintain the applicable Product in accordance with the installation instructions, operating instructions, and listing agent identification label furnished with the applicable Product; (2) failure to install the applicable Product in accordance with local building codes; (3) shipping or improper handling; (4) improper operation, abuse, misuse, continued operation with damaged, corroded or failed components, accident, or improperly/incorrectly performed repairs; (5) environmental conditions, inadequate ventilation, negative pressure, or drafting caused by tightly sealed constructions, insufficient make-up air supply, or handling devices such as exhaust fans or forced air furnaces or other such causes; (6) use of fuels other than those specified in the operation instructions; (7) installation or use of components not supplied with the applicable Product or any other components not expressly authorized and approved by HHT; (8) modification of the appliance not expressly authorized and approved by HHT in writing; and/or (9) interruptions or fluctuations of electrical power supply to the applicable Product.
- Non-HHT venting components, hearth connections or other accessories used in conjunction with the applicable Product.
- Any part of a pre-existing fireplace system in which an insert or a decorative gas applicable Product is installed.
- HHT's obligation under this Warranty does not extend to the Product's capability to heat the desired space. Information is provided to assist the consumer and the dealer in selecting the proper Product for the application. Consideration must be given to the Product location and configuration, environmental conditions, insulation and air tightness of the structure.

This warranty is void if:

- The applicable Product has been over-fired, operated in atmospheres contaminated by chlorine, fluorine, or other damaging chemicals. Over-firing can be identified by, but not limited to, warped plates or tubes, deformation/warping of interior cast iron structure or components, rust colored cast iron, bubbling, cracking and discoloration of steel or enamel finishes.
- The applicable Product is subjected to prolonged periods of dampness or condensation.
- There is any damage to the applicable Product due to water or weather damage which is the result of, but not limited to, improper chimney or venting installation.

LIMITATIONS OF REMEDIES AND LIABILITY:

- **EXCEPT TO THE EXTENT PROVIDED BY LAW, HHT MAKES NO EXPRESS WARRANTIES OTHER THAN THE WARRANTY SPECIFIED HEREIN. The owner's exclusive remedy and HHT's sole obligation under this Warranty or in contract, tort or otherwise, shall be limited to, at HHT's sole option, replacement of the Component Part(s), repair of the Component Part(s), or refund of the original purchase price of the applicable Product(s). In no event will HHT be liable for any incidental or consequential damages caused by defects in the applicable Product. Some States do not allow the exclusion or limitation of incidental or consequential damages, so the above limitation or exclusion may not apply to you. This Warranty gives you specific legal rights and you may also have other rights which vary from State to State. THE DURATION OF ANY IMPLIED WARRANTY IS LIMITED TO DURATION OF THE EXPRESSED WARRANTY SPECIFIED ABOVE FOR THE APPLICABLE PRODUCT. Some States do not allow limitations on how long an implied warranty lasts, so the above limitation may not apply to you.**

2 Product Specific and General Information

A. Appliance Certification

This fireplace system has been tested and listed in accordance with UL 127 standards by Underwriters Laboratories Inc. for installation and operation in the United States.

This fireplace may be installed in sleeping rooms. This fireplace is not approved for installation in manufactured homes. If installed with a gas log set, provisions for the National Fuel Gas Code must be met.

This fireplace has been tested and listed for use with the optional components specified in this manual. These optional components may be purchased separately and installed at a later date. An outside air kit, gas log set, gas insert or gas log-lighter should be installed at the time of fireplace installation.

Warning! Risk of Fire!
For use with solid wood fuel only.
Other fuels may overfire and generate poisonous gases (i.e. carbon monoxide).

B. Vented Gas Log Sets, Unvented Gas Log Sets, Gas or Wood Inserts and Gas Log Lighters

- Optional
- Gas log sets, gas or wood inserts, or gas log-lighters can be installed in this fireplace. Follow the instructions provided with the accessory for operation.

Unvented Gas Logs

CAUTION! I*f* an unvented gas appliance is installed in the fireplace, the gas appliance must only be operated with the fireplace glass door fully open (if included). Only unvented gas log sets which have been found to comply with the standard for unvented room heaters, ANSI Z211.11.2, are to be installed in this fireplace. If an unvented gas appliance is installed it must incorporate an automatic shutoff device, and must be installed in accordance with the National Fuel Gas Code Z223.1, Latest edition.

WARNING! Do Not *operate an unvented gas log set in this fireplace with the chimney removed.*

3 Important Safety and Operating Information

A. Fireplace Safety

Most problems are caused by improper installation and operation of the fireplace. To provide reasonable fire safety, the following should be given serious consideration:

- The fire should be supervised whenever the fireplace is in use.
- An annual inspection should be performed on the fireplace system.
- Install at least one smoke detector on each floor of your home to ensure your safety.
- Install a conveniently located Class A fire extinguisher near the fireplace.
- Devise a practiced evacuation plan, consisting of at least two escape routes.
- Devise a plan to deal with a chimney fire:
  - Evacuate.
  - Notify the fire department.

WARNING! Risk of Fire! *Hearth & Home Technologies disclaims any responsibility for, and the warranty and agency listing will be voided by the following actions.*

DO NOT:

- *operate damaged fireplace*
- *modify fireplace*
- *overfire*
- *install any component not approved by Hearth & Home Technologies*
- *install parts or components not Listed or approved*
- *operate the fireplace without fully assembling all components*

Improper installation, adjustment, alteration, service or maintenance can cause injury or property damage.

⚠ WARNING: This product and the fuels used to operate this product (wood and wood pellets), and the products of combustion of such fuels, can expose you to chemicals including carbon black, which is known to the State of California to cause cancer and carbon monoxide, which is known to the State of California to cause birth defects or other reproductive harm. For more information go to: www.P65Warnings.ca.gov.

1. Clear Space

Combustible materials must not be stored on the hearth extension. Room furnishings such as drapes, curtains, chairs or other combustibles must be at least 4 ft (1219 mm) from the front of the fireplace.

Combustible materials are materials made of or surfaced with any of the following materials:

- Wood
- Plant fibers
- Plywood/OSB
- Compressed paper
- Plastic
- Drywall
- Any material that can ignite and burn, flame proofed or not, plastered or un-plastered.

Non-combustible materials are materials which will not ignite and burn, composed of any combination of the following:

- Steel
- Brick
- Concrete
- Glass
- Iron
- Tile
- Slate
- Plasters

WARNING! Risk of Fire! *Keep combustible materials, gasoline and other flammable vapors and liquids clear of the fireplace.*

DO NOT:

- *store flammable materials close to the fireplace*
- *use gasoline, lantern fuel, kerosene, charcoal lighter fluid or similar liquids to start or "freshen up" a fire in this fireplace.*

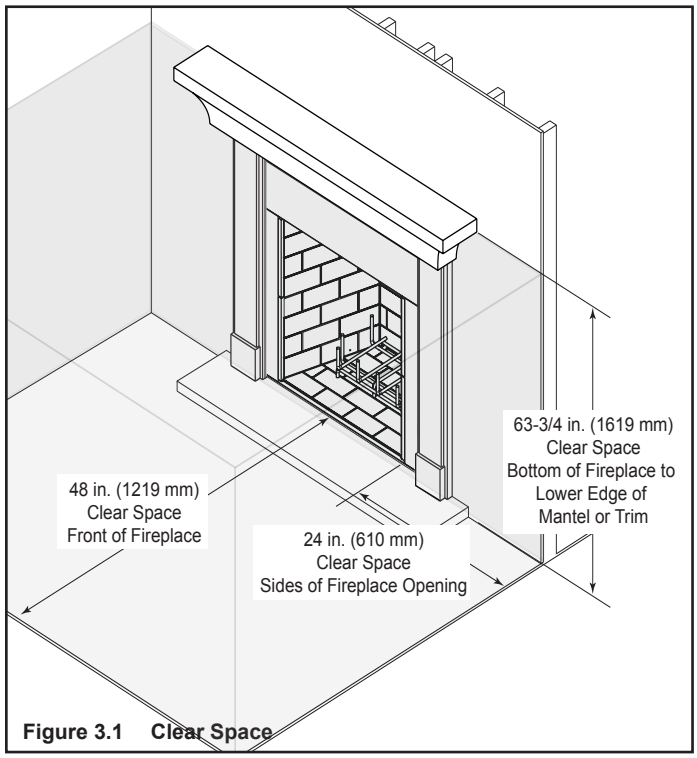

Figure 3.1 Clear Space

2. Grate

This fireplace is designed to be used with the supplied grate or one approved by HHT.

WARNING! Risk of Fire! *Use only the factory-supplied integral grate.*

- *Keeps logs in place.*
- *Allows proper air circulation around the fire.*

3. Molded Brick Panel

- The molded brick panel is shipped separately, but required to contain heat and provide an attractive interior.
- It will deteriorate over time and will need occasional replacement. Small hairline cracks and discoloration are normal and do not affect its safety.
- Cracks in the mortar may occur and do not affect the safety of the fireplace.
- (See Molded Brick Panel Maintenance, Section 4.F.)

WARNING! Risk of Fire! DO NOT *burn fireplace without molded brick panel. Use only panels supplied by Hearth & Home Technologies.*

4. Firescreen

The firescreen is provided to control sparks. Keep it closed when the fireplace in use.

WARNING! Risk of Fire or Burns!

- *Screen will not prevent burning materials from falling out.*
- *Screen pulls or handles may be hot.*

5. Flue Damper

The flue damper must be in the fully opened position during operation of the fireplace.

WARNING! Risk of Fire and Asphyxiation! *Open damper prior to operating fireplace. A closed damper overfires the fireplace and spills smoke and flames into the room.*

6. Glass Doors

Glass doors are optional.

WARNING! Risk of Fire! *Install ONLY doors approved by Hearth & Home Technologies.*

WARNING! Risk of Fire and Smoke! *Fireplace equipped with doors should be operated only with doors fully open or doors fully closed. If doors are left partly open, gas and flame may be drawn out of the fireplace opening.*

7. Over-Firing Your Fireplace

WARNING! Risk of Fire! *Do not over-fire.*

Over-firing may ignite creosote or will damage the fireplace and chimney.

To prevent over-firing your fireplace. DO NOT:

- *use flammable liquids*
- *overload with wood*
- *burn trash or large amounts of scrap lumber*
- *permit too much air to the fire*

Symptoms of over-firing may include one or more of the following:

- chimney connector or fireplace glowing
- roaring, rumbling noises
- loud cracking or banging sounds
- metal warping
- chimney fire

8. Chimney Fire

In the event of a chimney fire

- Have the chimney and adjacent structure inspected by qualified professionals. Hearth & Home Technologies recommends that NFI or CSIA certified professionals, or technicians under the direction of certified professionals, conduct a minimum of an **NFPA 211 Level 2** inspection of the chimney.
- Replace components of the chimney and fireplace as specified by the professionals.
- Ensure all joints are properly engaged and the chimney is properly secured.

WARNING! Risk of Fire! *A chimney fire can permanently damage your chimney system. Failure to replace damaged components and make proper repairs can cause a structure fire.*

⚠ WARNING

HOT SURFACES!

Glass and other surfaces are hot during operation AND cool down.

Hot glass will cause burns.

- **DO NOT** touch glass until it is cooled
- NEVER allow children to touch glass
- Keep children away
- CAREFULLY SUPERVISE children in same room as fireplace.
- Alert children and adults to hazards of high temperatures.

High temperatures may ignite clothing or other flammable materials.

- Keep clothing, furniture, draperies and other flammable materials away.

CAUTION! *If you expect that children may come into contact with this fireplace, we recommend a barrier such as a decorative screen. See your dealer for suggestions.*

B. General Operating Parts

WARNING! DO NOT *operate fireplace before reading and understanding operating instructions. Failure to operate fireplace according to operating instructions could cause fire or injury.*

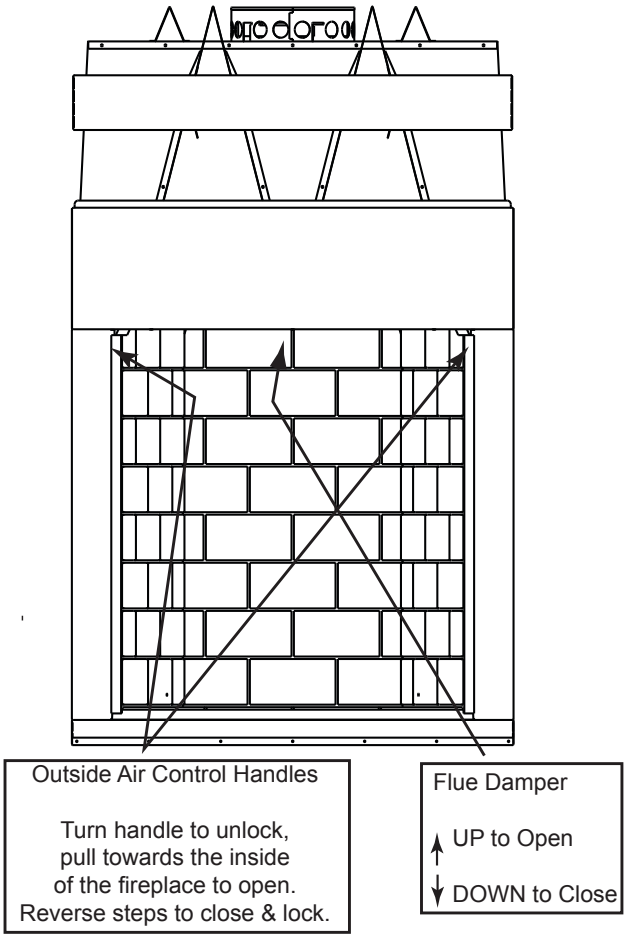

Figure 3.2 General Operating Parts

1. Flue Damper

The flue damper must be in the fully opened position (handle up toward the top of the fireplace) during operation of the fireplace.

Before lighting the fireplace, verify fully open position by looking up from the inside of the fireplace.

2. Outside Air

Refer to Figure 3.2 for location and operation of control.

The outside air kit supplies some combustion air for your fireplace. It may help reduce the effects of negative air pressure. Other methods may be required if more air is needed.

The outside air inlet should be in the fully opened position during operation of the fireplace.

Close the inlet to prevent cold drafts when the fireplace is not being used.

CAUTION! *Outside air control handle may be warm. Adjust before lighting fire.*

3. Glass Doors

- Glass doors are optional.
- Refer to Figure 3.3 for proper use.

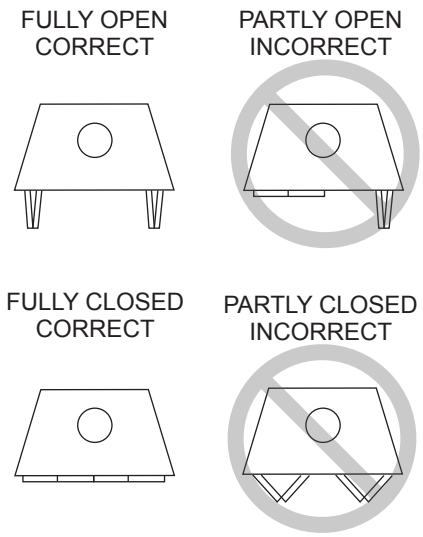

Figure 3.3 Operating Positions of Bi-fold Doors

C. Fuel

WARNING! For use with solid wood fuel only.

Other fuels may overfire and generate poisonous gases (i.e. carbon monoxide).

1. Hardwood vs. Softwood

Your fireplace's performance depends on the quality of the firewood you use. One species of wood varies very little to the other in terms of energy content. All seasoned wood contains about 8,000 BTU's per pound. Hardwoods have a greater density than softwoods; a piece of hardwood will contain about 60% more BTU's than an equal size piece of softwood. A cord of seasoned oak (hardwood) would contain about 60% more potential energy than a cord of seasoned pine (softwood).

Most softwoods are coniferous. These are trees with needle-like leaves that stay green all year and carry their seeds exposed in a cone. Examples of coniferous trees are Douglas fir, pine, spruce and cedar. Softwoods, being more porous, require less time to dry, burn faster and are easier to ignite than hardwoods. Hardwoods are deciduous trees, broadleaf trees that lose their leaves in the fall. Their seeds are usually found within a protective pod or enclosure. Some examples of deciduous trees are oak, maple, apple, and birch. However, it should be noted that there are some deciduous trees that are definitely not considered hardwoods such as poplar, aspen and alder. Hardwoods require more time to season, burn slower and are usually harder to ignite than softwoods. Obviously, you will use the type of wood that is most readily available in your area. However, if at all possible the best arrangement is to have a mix of softwood and hardwood. This way you can use the softwood for starting the fire, giving off quick heat to bring the fireplace up to operating temperature. Add the hardwood for slow, even heat and longer burn time.

Soft woods	Hard woods
• Douglas Fir	• Oak
• Pine	• Maple
• Spruce	• Apple
• Cedar	• Birch
• Poplar	
• Aspen	
• Alder	

WARNING! Risk of Fire!

- ***DO NOT*** *burn wet or green wood.*
- *Wet, unseasoned wood can cause accumulation of creosote.*

2. Moisture content

The majority of the problems fireplace owners experience are caused by trying to burn wet, unseasoned wood. Freshly cut wood can be as much water as it is wood, having a moisture content of around 50%. Imagine a wooden bucket that weighs about 8 pounds. Fill it with a gallon of water, put it in the firebox and try to burn it. This sounds ridiculous but that is exactly what you are doing if you burn unseasoned wood. Dead wood lying on the forest floor should be considered wet, and requires full seasoning time. Standing dead wood can be considered to be about two-thirds seasoned, if cut at the dry time of the year.

Burning wet, unseasoned wood will produce less heat output because it requires energy in the form of heat to evaporate the water trapped inside. This is wasted energy that should be used for heating your home. This moisture evaporates in the form of steam which has a cooling effect in your firebox and chimney system. When combined with tar and other organic vapors from burning wood it will form creosote which condenses in the relatively cool firebox and chimney.

Even dry wood contains at least 15% moisture by weight, and should be burned hot enough to keep the chimney hot for as long as it takes to dry the wood out - about one hour. To tell if wood is dry enough to burn, check the ends of the logs. If there are cracks radiating in all directions from the center, it is dry. If your wood sizzles in the fire, even though the surface is dry, it may not be fully cured.

3. Seasoning

Seasoned firewood is nothing more than wood that is cut to size, split and air dried to a moisture content of around 20%. The time it takes to season wood varies from around nine months for soft woods to as long as eighteen months for hardwoods. The key to seasoning wood is to be sure it has been split, exposing the wet interior and increasing the surface area of each piece. A tree that was cut down a year ago and not split is likely to have almost as high a moisture content now as it did when it was cut.

To season wood:

- Cut logs to size
- Split to 6 in. (152 mm) or less
- Air dry to a moisture content of around 20%
  - Soft wood - about nine months
  - Hard wood - about eighteen months

NOTICE: *Seasoning time may vary depending on drying conditions.*

4. Storing Wood

Splitting wood before it is stored reduces drying time. The following guideline will ensure properly seasoned wood:

- Stack the wood to allow air to circulate freely around and through the woodpile.
- Elevate the woodpile off the ground to allow air circulation underneath.
- The smaller the pieces, the faster the drying process. Any piece over 6 in. (152 mm) in diameter should be split.
- Wood should be stacked so that both ends of each piece are exposed to air, since more drying occurs through the cut ends than the sides. This is true even with wood that has been split.
- Store wood under cover, such as in a shed, or covered with a tarp, plastic, tar paper, sheets of scrap plywood, etc., as uncovered wood can absorb water from rain or snow, delaying the seasoning process. Avoid covering the sides and ends completely. Doing so may trap moisture from the ground and impede air circulation.

5. Burning Process

Fire requires fuel, air and heat. If heat is robbed from the fireplace during the drying stage, the new load of wood has reduced the chances for a good clean burn. Always burn dry, seasoned firewood.

6. Creosote Formation

When wood is burned slowly, it produces tar and other organic vapors which combine with expelled moisture to form creosote. The creosote vapors condense in the relatively cool chimney flue of a newly-started or a slow-burning fire. As a result, creosote residue accumulates on the flue lining.

When ignited, creosote creates an extremely hot fire which may damage the chimney or even destroy the house.

The chimney shall be inspected at least annually before lighting, or once every two months during heating season.

When creosote has accumulated it shall be removed to reduce the risk of a chimney fire.

D. Processed Solid Fuel Firelogs

Manufactured firelogs may be used with this fireplace. Hearth & Home Technologies recommends the use of UL Classified processed fuel firelogs. Follow the manufacturer's lighting and safety instructions.

Using firelogs may require more frequent chimney inspections and cleaning.

Do not poke or stir the logs while they are burning. Use only firelogs that have been evaluated for the application in manufactured fireplaces and refer to firelog warnings and caution markings on packaging prior to use.

E. First Fire

Before lighting your first fire in the fireplace, make certain that:

- refractory is in place
- all labels have been removed

F. Lighting Instructions

NOTICE: *You must establish a good draft to prevent smoke spillage into the room.*

- The first three or four fires should be of moderate size to allow the oils and binders to be burned from the fireplace and the refractory and paint to cure. You may notice an industrial odor the first few fires. This is considered normal.
- Use well-seasoned wood.
- Open the flue damper to a fully open position.
- Place crumpled or twisted paper under the fireplace grate.
- Loosely arrange kindling or small pieces of wood to form a 'tent' on the fireplace grate.
- Pre-warm the flue to establish a draft to help reduce smoke spillage during start-up. Hold a rolled up piece of burning newspaper under the flue damper for a few moments.
- Light the crumpled paper to ignite the kindling.
- Add small pieces of wood until a hot bed of embers has been established.
- Add a minimum of three average size pieces of split firewood, placed to allow combustion air and flames between them.

WARNING! Risk of Fire! *Keep combustible materials, gasoline and other flammable vapors and liquids clear of the fireplace.*

DO NOT:

- *store flammable materials close to the fireplace*
- *use gasoline, lantern fuel, kerosene, charcoal lighter fluid or similar liquids to start or "freshen up" a fire in this fireplace.*

4 Maintenance and Service

WARNING! Hot Surfaces!

Glass and other surfaces are hot during operation AND cool down. ***DO NOT*** *clean fireplace until it is cooled.*

Installation and repair should be done by a qualified service technician only. The fireplace should be inspected before use and at least annually by a professional service person.

The following tasks may be performed annually by the homeowner. If you are uncomfortable performing any of the listed tasks, **please contact your dealer for a service appointment.**

WARNING! Risk of Asphyxiation and Fire! *Annual inspection by qualified technician recommended.*

Check:

- *condition of doors, surrounds and fronts*
- *condition of glass and glass assembly*
- *obstructions of combustion and ventilation air*
- *obstructions of termination cap*

Clean:

- *glass*
- *air passageways, grilles*

A. Chimney Inspection

Frequency: As necessary; at least annually before lighting fireplace, or once every two months during heating season.
By: Homeowner/Chimney Sweep

- Confirm that termination cap remains clear and unobstructed.
- Inspect for blockages such as bird nests, leaves, etc.
- Inspect for corrosion or separation.
- Inspect for creosote and remove as needed, at least every two months during the heating season.
- Inspect the system at the fireplace connection and at the chimney top.

Have the chimney and adjacent structure inspected by qualified professionals. Hearth & Home Technologies recommends that NFI or CSIA certified professionals, or technicians under the direction of certified professionals, conduct a minimum of an **NFPA 211 Level 2** inspection of the chimney.

B. Creosote (Chimney) Cleaning

Frequency: As needed; at least annually before lighting, or once every two months during heating season. When creosote has accumulated it shall be removed to reduce the risk of a chimney fire.
By: Chimney Sweep
Tools Needed: Brush, Phillips screwdriver

- When wood is burned slowly, it produces tar and other organic vapors, which combine with expelled moisture to form creosote. The creosote vapors condense in the relatively cool chimney flue of a slow-burnign fire. As a result, creosote residue accumulates on the flue lining. When ignited, this creosote makes an extremely hot fire.
- Remove all ash from the firebox and extinguish all hot embers before disposal. Allow the fireplace to cool completely.
- Close the door tightly.
- Remove the top of the termination cap as shown in Figure 4.1 to clean the cap and chimney.
- The creosote or soot should be removed from the chimney with a brush specifically designed for the size of chimney in use.
- Reinstall termination cap.
- Clean out fallen debris from the firebox.

WARNING! Risk of Fire! *Ignited creosote is extremely HOT. Prevent creosote buildup.*

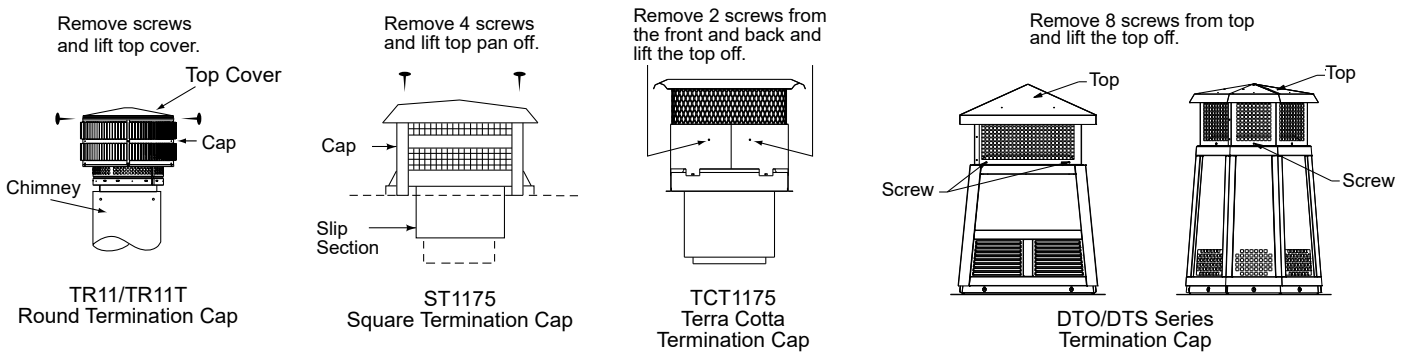

Figure 4.1 Chimney & Termination Cap Cleaning

C. Grate

Frequency: After each ash removal
By: Homeowner

Inspect grate for:

- Warping or sagging 1-1/2 in. (38 mm) or more
- Broken welds
- Burn-through of grate bars

For safe operation, replace only with the approved grate from Hearth & Homes Technologies.

D. Glass Cleaning

Frequency: As necessary
By: Homeowner
Tools Needed: Vinegar or glass cleaner, soft towel

- Clean glass with a non-abrasive glass cleaner. Use a damp cloth dipped in wood ashes or a commercially available oven cleaner. Remove any oven cleaner residue with a glass cleaner or soap and water.

E. Ash Removal

Frequency: As necessary
By: Homeowner
Tools Needed: Covered metal container, metal shovel, fireplace broom

WARNING! Risk of Fire! DO NOT *remove ashes until the fire is out and the fireplace is cold.*

- Ashes should be placed in metal container with tight fitting lid.
- The closed container of ashes should be placed on a noncombustible floor or on the ground, well away from all combustible materials, pending final disposal.
- If the ashes are disposed of by burial in soil or otherwise locally dispersed, they should be retained in the closed container until all cinders have thoroughly cooled.

F. Refractory

Frequency:
By:
Tools Needed:

- Inspect condition of refractory. Replace if crumbly or otherwise deteriorated, or if cracks exceed 1/4 in. (6 mm).

5 Troubleshooting

Start Fire Problems	Possible Cause	Solution
Can't get fire started Excessive smoke or spillage Burns too slowly Smolders, sizzles	Not enough kindling/paper or no kindling/paper	Use dry kindling, more paper. Arrange kindling & wood for air movement.
	Damper closed/not fully open	Open damper.
	Not enough air for fire to ignite	Check for restricted cap/shroud.
		Open air kit (if installed).
		Check for flue blockage.
		Pre-warm flue before starting fire (refer to starting fire section).
		Check for adequate vent height (refer to chimney assembly section).
		Open window below the fireplace towards the wind.
	Wood condition is too wet, too large	Use dry, seasoned wood (refer to wood fuel section).
	Bed of coals not established before adding wood	Start with paper & kindling to establish bed of coals (refer to starting fire section).
	Flue blockage such as birds' nests or leaves in termination cap	Have chimney inspected for creosote and cleaned by a certified chimney sweep.
	Down draft or negative pressure Competition with exhaust devices	Do not use exhaust fans during start-up (refer to negative pressure section).
		Open window below the fireplace towards the wind.
Fire burns too fast	Extremely dry or soft wood	Mix in hardwood.
		Mix in less seasoned wood after fire is established (refer to wood fuel section).
	No glass doors	Add glass doors to slow down air flow.
	Overdrafting	Check for correct vent height; too much vertical height creates overdrafting.
		Check location of vent termination (refer to chimney assembly section).

A. FAQs

Hearth & Home Technologies assumes no responsibility for the improper performance of the fireplace system caused by inadequate draft due to environmental conditions, down drafts, tight sealing construction of the structure, or mechanical exhausting devices which will create a negative air pressure within the structure where the fireplace is located.

If smoke spillage occurs from a fireplace opening when the door is open, there is either a leakage in the flue, a blockage in the flue, or some condition is affecting draft Understanding and differentiating the conditions which can cause each of these kinds of spillage problems is essential to their solution.

- Flue Leakage
  Check for improperly connected flue joints or a damaged flue joint in the chimney system. Such leakage would reduce draft (air would be drawn in through the leaks rather than through the fireplace). The result might be difficult start-up and smoky fires that might spill if other adverse draft conditions accompany this problem.
- Flue Blockage
  The damper should be open.
  Check for objects that may have fallen down the chimney.

Flue draft is measured as negative pressure in the chimney. The amount of negative pressure determines how strong the draft is. The draft is important because it draws the combustion air into the fireplace and pulls the smoke out of the chimney.

There are three basic criteria essential in establishing and maintaining flue draft:

- availability of combustion air
- heat generated from the fire
- diameter and height of the flue system

These three factors work together as a system to create the flue draft. Increasing or decreasing any one of them will affect the other two and thus change the amount of draft in the entire system.

If the fire is hard to start and smoke spills out of the fireplace, or you find it difficult to establish and maintain a moderately high burn rate, then the flue draft is too low and corrective measures must be taken.

Be sure you have air available for combustion and that your firewood is dry and well seasoned. Build your fires properly and according to the instructions given in operating instructions, “Starting a Fire”. Be sure your flue system is installed correctly and that it is the proper diameter and height. Check for the following:

- All chimney sections are properly installed.
- The chimney is clean and free of creosote or soot buildup.
- Make sure overhanging trees and branches are cut back within ten feet of the top of the chimney and the chimney is free of debris from animals.
- Ensure the chimney cap is clean and free of any buildup of soot or creosote if cap is equipped with a spark arrestor screen.
- The wood being used in dry and well seasoned.

If you still suspect you have a low draft problem it may be necessary to increase the volume of air in your flue system. Since the diameter of your flue system is matched with the size of the flue collar and should not be changed, then the height of the system must be increased. Add chimney sections one at a time until the draft improves.

In some cases, regardless of what you do, it can still be difficult to establish the proper flue draft. This is especially evident when using an exterior factory-built chimney or exterior masonry chimney. Try holding a burning rolled up newspaper as close to the flue outlet as possible for a few minutes, then light the paper under the kindling. The heat generated from the burning rolled up newspaper should help get the draft established.

Still other factors can affect how well your flue system performs. Neighboring structures, high winds, tall trees, even hillsides can affect air currents around the chimney. Well designed chimney caps are available that can help. Your fireplace dealer is the local expert in your area. He can usually make suggestions or discover problems that can be easily corrected allowing your fireplace to operate correctly as it has been designed, providing safe and economical heat for your home.

Contact your dealer for additional information regarding operation and troubleshooting. Visit www.vermontcastingsgroup.com to find a dealer.

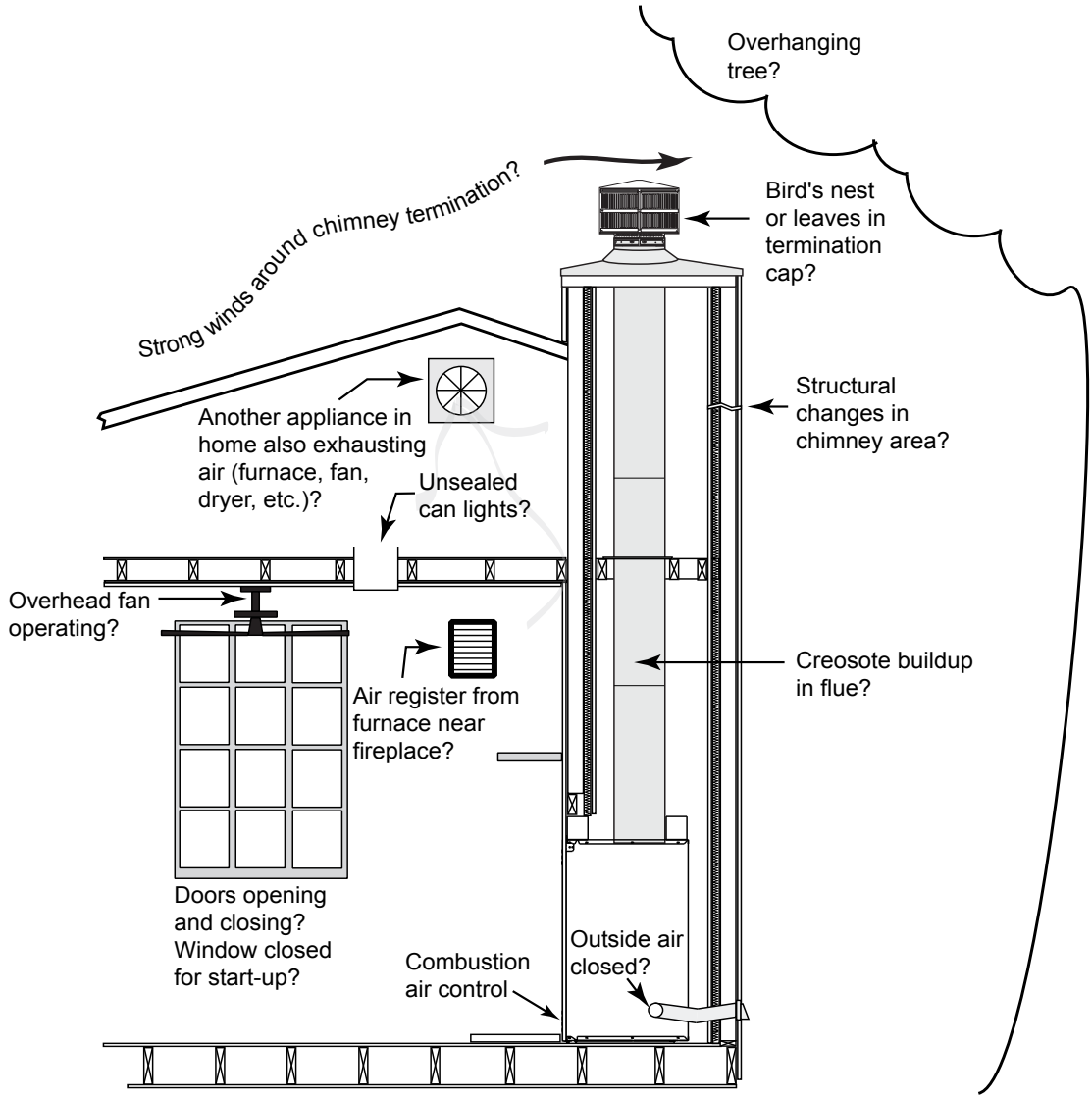

Figure 5.1 Factory-built Fireplaces: Troubleshooting

6 Reference Materials

A. Service Parts

Service Parts **ASH42-B**

Ashland 42” Woodburning Fireplace **Beginning Manufacturing Date: Oct 2025**
Ending Manufacturing Date: Active

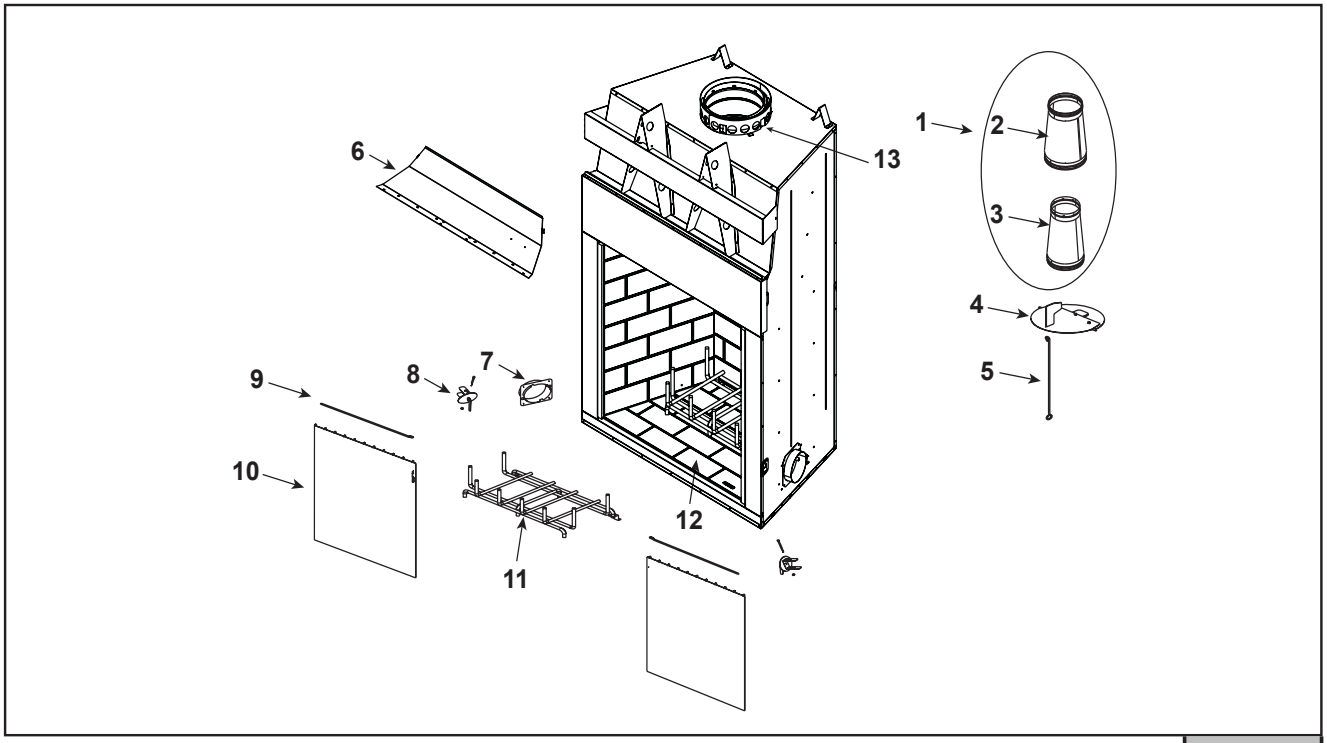

IMPORTANT: THIS IS DATED INFORMATION. Parts must be ordered from a dealer or distributor. **Hearth and Home Technologies does not sell directly to consumers.** Provide model number and serial number when requesting service parts from your dealer or distributor.

ITEM	DESCRIPTION	COMMENTS	PART NUMBER	Stocked at Depot
1	Transition Assembly		SRV4059-044	
2	Outer Transiton Assembly		SRV24377	
3	Inner Transiton Collar		SRV4059-148	
4	Damper Blade Assembly		SRV4059-030	
5	Damper Control		SRV35159	
6	Smoke Shield		SRV4059-117	**Y**
7	Outside Air Collar Assembly	Qty 2 req	SRV4059-037	**Y**
8	OA Door	Qty 2 req	SRV4059-049	
9	Screen Rod	Qty 2 req	SRV4059-312	
	Screen Rod Clips	Qty 2 req	SRV4059-111	**Y**
10	Firescreen Assembly	Qty 2 req	SRV4059-028	
11	Grate Assembly		GR38	
12	Hearth Refractory	Natural Gray	SRV4059-381	
		Antler Velvet	SRV4059-381AV	
		Black Onyx	SRV4059-381BK	
		Masonry Brown	SRV4059-381BR	
13	Starter Collar		SRV4059-137	

Additional service parts on following page

Beginning Manufacturing Date: Oct 2025
Ending Manufacturing Date: Active

IMPORTANT: THIS IS DATED INFORMATION. Parts must be ordered from a dealer or distributor. **Hearth and Home Technologies does not sell directly to consumers.** Provide model number and serial number when requesting service parts from your dealer or distributor.

ITEM	DESCRIPTION	COMMENTS	PART NUMBER	Stocked at Depot
	Grate Retainer	Qty 2 req	SRV4017-060	
	Mortar	10 Lb Bucket	MMMORTR	
	Outside Air Hood	Qty 2 req	SRV4059-271	
	Strip Protector		SRV18320	
	Owners Manual		4059-969	
	Installation Manual		4059-968	

Traditional Refractory Assembly

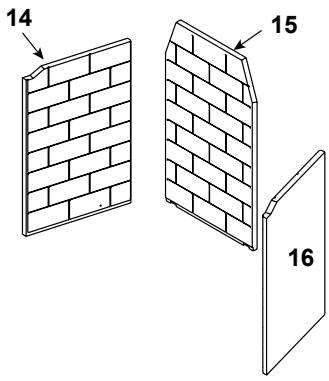

	Traditional Refractory Set	Natural Gray	WDR3842-T-NG	
		Antler Velvet	WDR3842-T-AV	
		Black Onyx	WDR3842-T-BK	
		Masonry Brown	WDR3842-T-BR	
14	Left Panel	Natural Gray	SRV4059-852	
		Antler Velvet	SRV4059-852AV	
		Black Onyx	SRV4059-852BK	
		Masonry Brown	SRV4059-852BR	
15	Back Panel	Natural Gray	SRV4059-851	
		Antler Velvet	SRV4059-851AV	
		Black Onyx	SRV4059-851BK	
		Masonry Brown	SRV4059-851BR	
16	Right Panel	Natural Gray	SRV4059-853	
		Antler Velvet	SRV4059-853AV	
		Black Onyx	SRV4059-853BK	
		Masonry Brown	SRV4059-853BR	
	Refractory Fastener Pack Contains: 8 #6 X 1 1/2” Panhead screw, 3/32” Drill Bit, 8 Clips		SRV4059-668	

Additional service parts on following page

Beginning Manufacturing Date: Oct 2025
Ending Manufacturing Date: Active

Herringbone Refractory Assembly

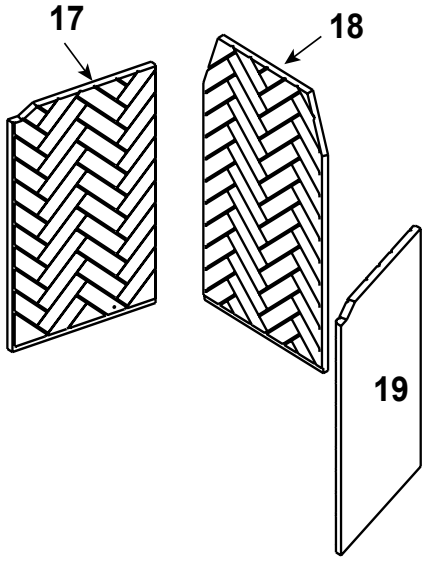

IMPORTANT: THIS IS DATED INFORMATION. Parts must be ordered from a dealer or distributor. **Hearth and Home Technologies does not sell directly to consumers.** Provide model number and serial number when requesting service parts from your dealer or distributor.

ITEM	DESCRIPTION	COMMENTS	PART NUMBER	Stocked at Depot
	Herringbone Refractory Set	Natural Gray	WDR3842-H-NG	
		Antler Velvet	WDR3842-H-AV	
		Black Onyx	WDR3842-H-BK	
		Masonry Brown	WDR3842-H-BR	
17	Left Panel	Natural Gray	SRV4059-856	
		Antler Velvet	SRV4059-856AV	
		Black Onyx	SRV4059-856BK	
		Masonry Brown	SRV4059-856BR	
18	Back Panel	Natural Gray	SRV4059-855	
		Antler Velvet	SRV4059-855AV	
		Black Onyx	SRV4059-855BK	
		Masonry Brown	SRV4059-855BR	
19	Right Panel	Natural Gray	SRV4059-857	
		Antler Velvet	SRV4059-857AV	
		Black Onyx	SRV4059-857BK	
		Masonry Brown	SRV4059-857BR	
	Refractory Fastener Pack Contains: 8 #6 X 1 1/2” Panhead screw, 3/32” Drill Bit, 8 Clips		SRV4059-668	

B. Accessories

1. Doors

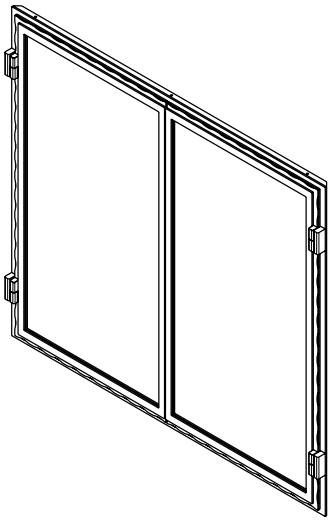

DFG4042 Series Glass Bi-fold Doors (optional)

2. Gas Inserts
3. Gas Log Sets
4. Gas Log Lighters
5. Wood-burning Inserts

C. Contact Information

Majestic, a brand of Hearth & Home Technologies
7571 215th Street West, Lakeville, MN 55044
www.majesticproducts.com

Please contact your HHT dealer with any questions or concerns.

– NOTES –

CAUTION

DO NOT DISCARD THIS MANUAL

- Important operating and maintenance instructions included.
- Read, understand and follow these instructions for safe installation and operation.
- Leave this manual with party responsible for use and operation.

This product may be covered by one or more of the following patents: (United States) 5000162, 5016609, 5076254, 5113843, 5191877, 5218953, 5263471, 5328356, 5341794, 5347983, 5413089, 5429495, 5452708, 5542407, 5890485, 5931661, 5941237, 5947112, 5996575, 6006743, 6019099, 6048195, 6053165, 6145502, 6170481, 6237588, 6296474, 6374822, 6413079, 6439226, 6484712, 6543698, 6550687, 6601579, 6672860, 6688302, 6688302B2, 6715724B2, 6729551, 6736133, 6748940, 6748942, 6769426, 6774802, 6796302, 6840261, 6848441, 6863064, 6866205, 6869278, 6875012, 6880275, 6908039, 6919884,7047962, 7216645, D320652, D445174, D462436; (Canada) 1297749, 2195264, 2225408, 2313972; (Australia) 780250, 780403, 1418504 or other U.S. and foreign patents pending.

Printed in U.S.A. - Copyright 2012