Gas Log Sets

THE CONVENIENCE OF GAS.
THE EXPERIENCE OF AN OPEN HEARTH.

3 TIER

24" Grand Oak 3 tier log set

24" Grand Birch 3 tier log set

24" Heritage Oak 3 tier log set

2 TIER

24" Grand Oak 2 tier log set

24" Grand Birch 2 tier log set

24" Heritage Oak 2 tier log set

The convenience of gas meets the experience of an open-hearth fireplace. Hand-painted logs are designed to be ultra-realistic – beautiful with or without a burning fire. Simply use the included switch or remote for immediate, radiant heat that's reminiscent of a real fire. Enjoy a bold, dynamic fire without the mess or hassle of wood.

- Available in 18", 24" and 30" widths
- Available in two heights to accommodate multiple fireplace sizes*
- Three unique log sets for each burner height
- Battery-powered electronic ignition, including on/off remote for easy control*
- Available for indoor and outdoor fireplaces
- Up to 92,000 BTUs

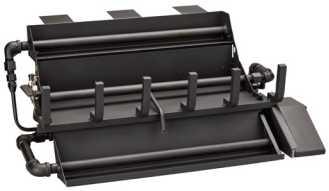
3 Tier Indoor Stadium Burner

3 Tier Outdoor Stadium Burner

On/Off Remote Included

2 Tier Indoor Stadium Burner

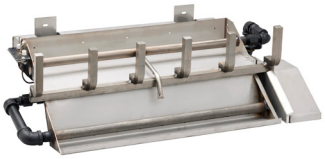
2 Tier Outdoor Stadium Burner

* Refer to page 6 for burner and ignition details

18/24" Duzy 5 log set

18/24" Duzy 3 log set

Transform your space with our premium gas log sets, designed to deliver the warmth and charm of an open-hearth fire without the hassle. Hand-painted logs fill the width of your firebox and offer stunning realism and long-lasting durability, while the burner emits glowing embers, large flames and radiant heat you can feel, all controlled by a simple touch of the remote.

- Available in 18", 24" and 30" width
- 3 distinctive log sets
- Unique burner design provides up to 17,000 BTUs of radiant heat*
- Battery-powered electronic ignition, including on/off remote for easy control*
- Indoor and covered patio fireplaces only

Radiant Burner

On/Off Remote Included

18/24" Duzy 2 log set

* Refer to page 6 for burner and ignition details

24" Contemporary Burner with Cannon Balls

24" Contemporary Burner with Smoke and Crystal Media

Your fireplace gets a touch of finesse with the Contemporary Series. The slim burner is designed for existing fireboxes so you can easily upgrade your wood-burning fire to a more efficient, contemporary solution. Reflective glass or lava rock and optional cannon ball set provides a modern backdrop for the liveliness of warm, glowing flames, while the electronic ignition makes for simple startup.

- Available in 24" and 30" widths
- Multiple media options to fit any design style
- Optional charcoal-colored cannon balls
- Battery-powered electronic ignition, including on/off remote for easy control*
- Up to 68,000 BTUs
- Indoor and covered patio fireplaces only

Copper Ember Media

Crystal Ember Media

Graphite Ember Media

Contemporary Burner

On/Off Remote Included

Smoked Embers Media

Lava Rock

Cannon Balls

* Refer to page 6 for burner and ignition details

24" Smoldering Timberland Oak log

24" Woodland Birch log set

24" Timberland Oak log set

24" Kindled Stack log set

Preserve the heart of your home with our Classic Gas Logs Series. Hand-painted logs are reminiscent of a rustic fire and designed to accommodate your existing firebox, providing more efficient and effortless use of an open-hearth style fireplace. Ignite via match strike for an authentic experience or enjoy easy flame-height customization via remote.

- Available in 18", 24" and 30" widths
- Four different log options
- Choose from double or single tube burner system
- Ignite the fire with the strike of a match, a standing pilot, or the touch of a remote
- Up to 80,000 BTUs

Double Tube Burner

- Provides even more ambiance with an additional burner for twice the flame and glow*
- Available for indoor and covered patio fireplaces
- Electronic ignition including on/off remote or safety pilot ignition with built in on/off/high/low remote*

Single Tube Indoor Burner

Single Tube Outdoor Burner

- Provides large flames and glowing ember bed*
- Available for use indoors and outdoors
- Match light or safety pilot ignition*

On/Off Remote Included

On/Off/High/Low Remote

* Refer to page 6 for burner and ignition details

BURNER & IGNITION TECHNOLOGY

IGNITIONS

Electronic - Often referred to as intermittent pilot ignition (IPI) uses battery power to monitor a safe ignition experience and save on fuel bills. Capable of being converted to 110V with accessory kit.

Safety Pilot - Provides a standing pilot to give you instant fire with the turn of a knob or push of a button. This ignition also automatically shuts off when flames go out to ensure safety.

Matchlight Ignition - As the name implies, ignites your fire with the strike of a match.

BURNERS

Stadium Burner - Two and three-tiered allow you to fill out your fireplace with a large log stack and impressive ember bed. Offered in both indoor and outdoor options with an electronic ignition system. The indoor unit includes a remote.

Radiant Burner - Specifically designed to push heat into the room. Where most gas log sets are known for aesthetics but not heat, the radiant burner provides the best of both! Available with electronic ignition that includes an on/off remote.

Contemporary Burner - Unique design to create a more modern visual inside a traditional fireplace. Multiple media options that can be mixed together if desired to create a unique experience. Available with electronic ignition that includes an on/off remote.

Tube Burners - These simplistic burners offer immersive glow and flame. The single tube, by description, offers one tube on a pan style burner emitting large flames and an active ember bed. The double tube includes an additional tube in the pan style burner to produce a much more expansive and captivating ember bed with delightful flames. Available with a matchlight, safety pilot and electronic ignition. Double tube offers a safety pilot with an on/off remote and high/low flame high adjustment

BURNER CONTENTS

Sand: Evenly distributes flames across the burner and insulates the burner pan; primarily used on natural gas models.

Vermiculite: Evenly distributes flames across the burner and insulates the burner pan; primarily used on propane models.

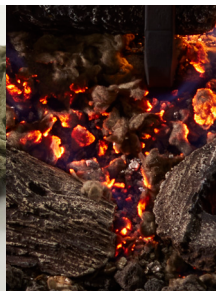

Glowing Embers: Decorative material used to enhance the glow and overall aesthetics of the burner.

Lava Rock: Completes the look of the gas log set, providing an authentic fire experience.

FIND YOUR PERFECT FIT

STEP 1: Measure your fireplace height, width, depth and rear width. (See diagram.)

STEP 2: Choose a burner and gas log set that fits within your measured dimensions.

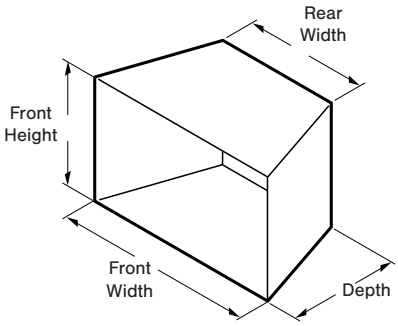

SPECIFICATIONS

Series	Log Sets, Media, and Cannon Balls	Burners	Majestic Open and Wood Fireplaces											Min. Fireplace Floor Dimensions				BTUs
			36" Royalton	42" Royalton	36" Sovereign	42" Sovereign	36" Biltmore	42" Biltmore	50" Biltmore	36" Ashland	42" Ashland	50" Ashland	See Thru	Front Width	Depth	Rear Width	Height	
Grand	Grand Oaks Grand Birch Heritage Oak	18" 2 Tier					X	X	X					27"	16"	19"	18"	Up to 92,000 BTUs
		24" 2 Tier					X	X	X					34"	20"	22"	18"	
		30" 2 Tier						X	X					40"	20"	29"	18"	
		18" 3 Tier					X			X				32"	23"	21"	22"	
		24" 3 Tier						X			X			34"	23"	22"	22"	
		30" 3 Tier							X			X		40"	23"	29"	22"	
Duzy	Duzy 2, 3, and 5	18/24" Radiant	X	X	X	X	X	X		X				18-1/2"	13-1/2"	28"	16"	Up to 65,000 BTUs
		30" Radiant	X	X	X	X	X	X		X				24-1/2"	13-1/2"	34"	16"	
Contemporary	Media & Cannon Balls	24" Contemporary						X	X		X	X		30"	20"	23"	15"	Up to 68,000 BTUs
		30" Contemporary							X			X		36"	20"	29"	15"	
Classic	Timberland Oak Smoldering Timberland Oak Woodland Birch Kindled Stack	18" Single Tube	X	X	X	X	X	X	X					28"	14"	16"	16"	Up to 80,000 BTUs
		24" Single Tube		X		X		X	X					34"	14"	18"	18"	
		30" Single Tube						X	X					42"	16"	24"	20"	
		18" Double Tube (Safety Pilot)	X	X	X	X	X	X	X					28"	14"	16"	16"	
		24" Double Tube (Safety Pilot)		X		X		X	X					34"	16"	18"	18"	
		30" Double Tube (Safety Pilot)						X	X					42"	16"	24"	20"	
		18"/24" Double Tube (IPI)					X	X	X	X	X	X		34"	18"	20"	16"	
		30" Double Tube (IPI)						X	X	X	X	X		36"	18"	24"	18"	
See Thru	Supreme Oak	18" See Thru											X	28"	18"		18"	Up to 75,000 BTUs
		24" See Thru											X	34"	18"		18"	

Grand Oak
3 Tier log set

Your Majestic Dealer:

Our Sustainability Story
Our history of leadership in the hearth industry compels us to now lead the way in developing manufacturing practices that ensure our planet remains as durable, beautiful and long-lasting as our products. Find out how we are leading the industry in sustainable practices by scanning the code.

LEARN MORE ONLNE

1. The IntelliFire Ignition System (IPI) is an advanced intermittent pilot ignition system. IPI constantly monitors ignition, ensures safe functioning and conserves up to $10/month in energy costs.

The information provided in this literature is for planning purposes only. Please consult the installation manual for actual installation. Actual product appearance, including flame, may differ from product images. Product information provided is not complete and is subject to change without notice. Product installation must adhere strictly to instructions accompanying product to avoid risk of fire and potential injury. For full warranty details, go to majesticproducts.com.

©2023 Hearth & Home Technologies Inc.

MAJESTIC

majesticproducts.com
majesticfireplaces.ca

C UL US LISTED

MAJ-1012U-0325