COK-E36CSX
COK-E36CBGX
COK-E42CSX
COK-E42CBGX

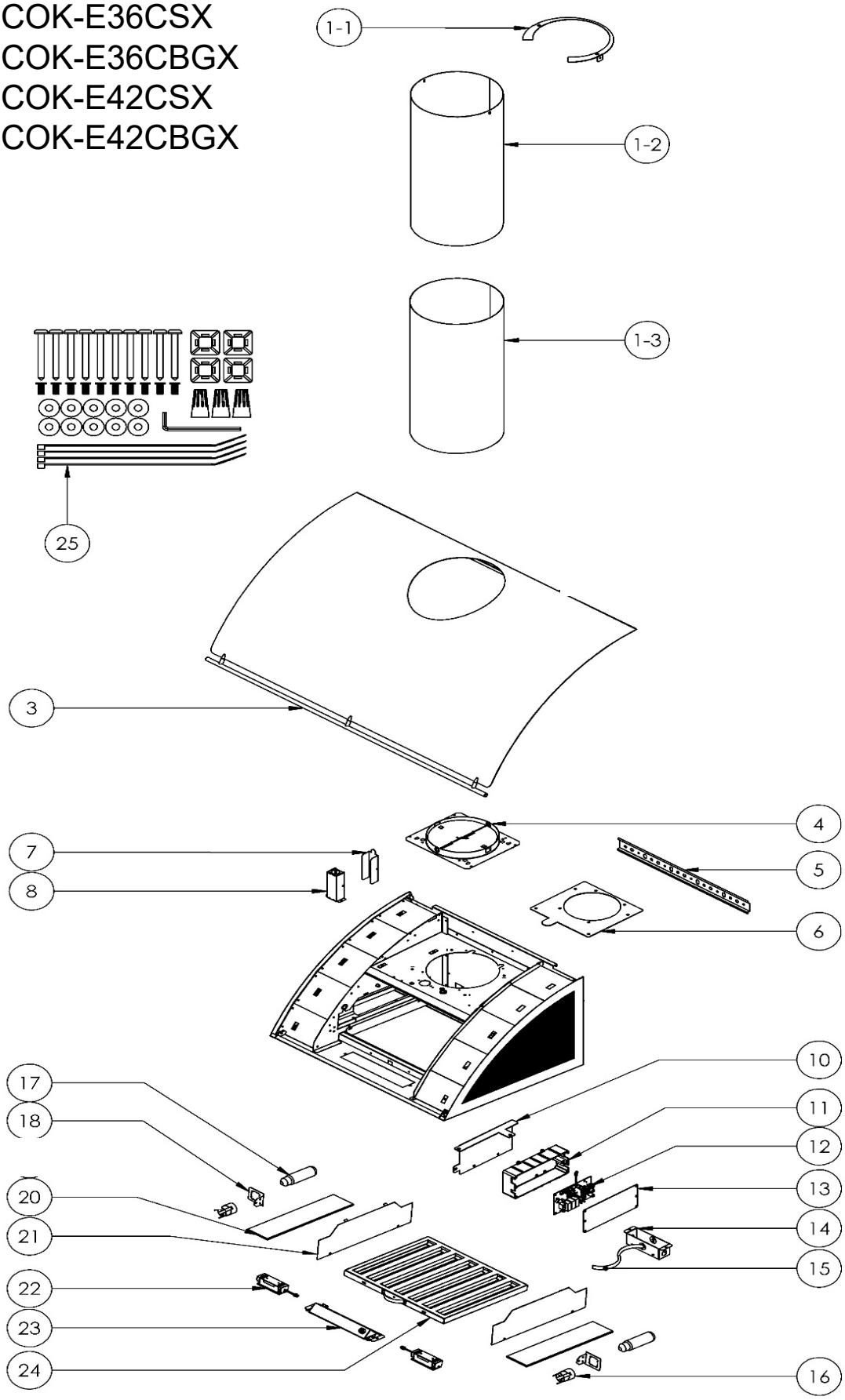

ZEPHYR

Okeanito

COK-E36CSX, COK-E42CSX
COK-E36CBGX, COK-E42CBGX

Ref #	Part #	Description	Qty.
1-1	54110085	Duct Cover Bracket	1
1-2	50050137	Upper Duct Cover, Stainless Steel	1
1-2	50050213	Upper Duct Cover, Brushed Gold	1
1-3	50050138	Lower Duct Cover, Stainless Steel	1
1-3	50050214	Lower Duct Cover, Brushed Gold	1
3	50320022	Utensil Rail, 36in	1
3	50320035	Utensil Rail, 42in	1
4	54050080	8in Round Duct Collar w/Damper	1
5	54110086	Hood Wall Mounting Bracket	1
6	54190040	Single Blower Mounting Plate	1
7	56210062	Wiring Box Cover	1
8	54200018	Wiring Box	1
10	54140156	Component Box Bracket	1
11	56200051	Component Box	1
12	11010154	Control Board	1
13	56210063	Component Box Cover	1
14	56200085	Electrical Box	1
15	11030076	Electrical Cord	1
16	12100018	Mood Light Socket	2
17	P12010008	LED Light Bulb, E26, 4W	2
18	54140157	Mood Light Socket Bracket	2
20	50110124	Bottom Mood Light Glass Panel	2
21	50140108	Interior Access Panel	2
22	Z0B0052	Swivel LumiLight LED, 6W	2
23	11000172	Switch Assembly	1
23-1	01020056	Screw, Carriage, Switch Housing	2
23-2	00100003	Nut, Switch Housing	2
24	50210036	Pro Baffle Filter	1
25	05000092	Hardware Packet	1

COK-E48CSX
COK-E48CBGX

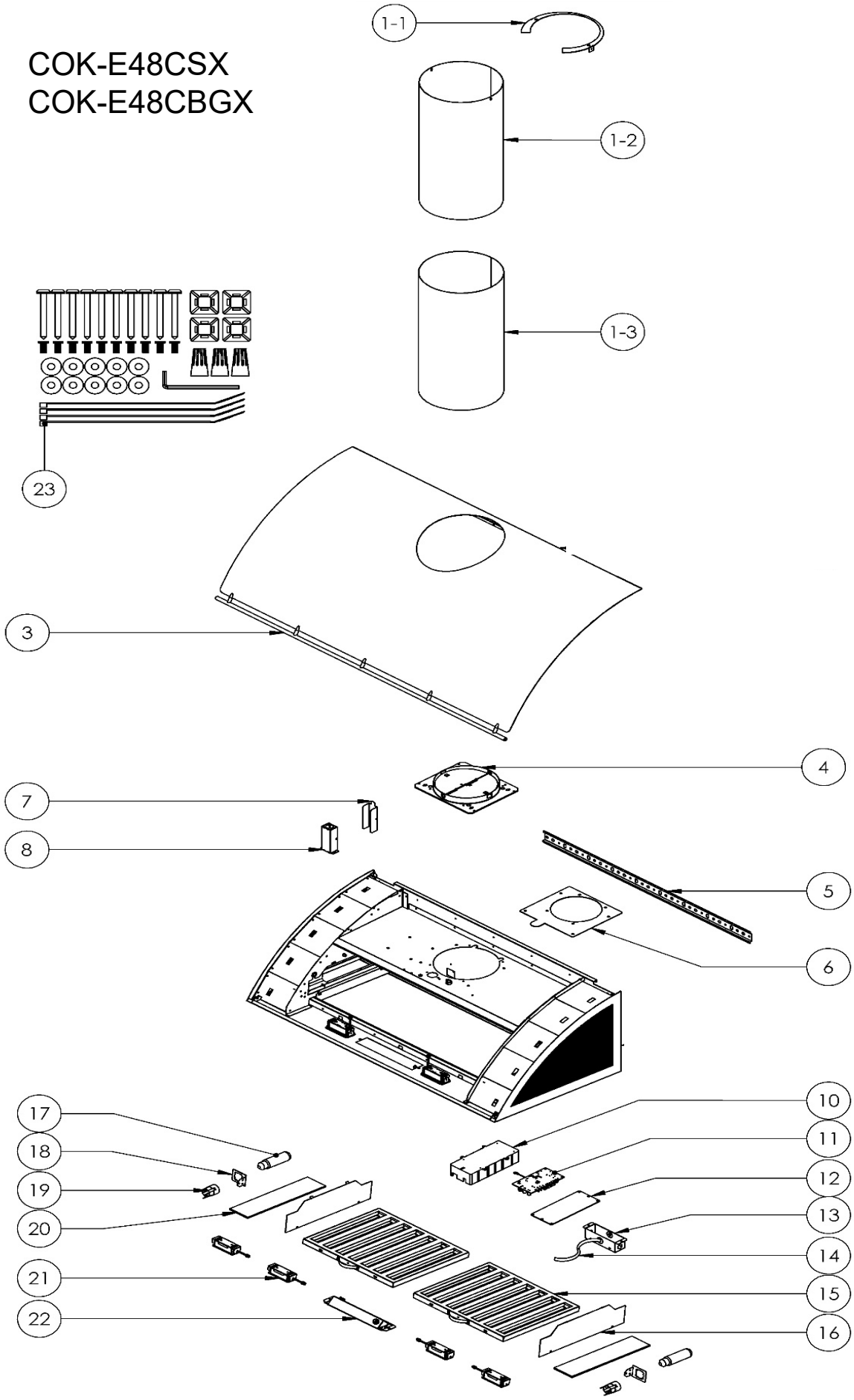

ZEPHYR

Okeanito

COK-E48CSX, COK-E48CBGX

Ref #	Part #	Description	Qty.
1-1	54110085	Duct Cover Bracket	1
1-2	50050137	Upper Duct Cover, Stainless Steel	1
1-2	50050213	Upper Duct Cover, Brushed Gold	1
1-3	50050138	Lower Duct Cover, Stainless Steel	1
1-3	50050214	Lower Duct Cover, Brushed Gold	1
3	50320036	Utensil Rail, 48in	1
4	54050080	8in Round Duct Collar w/Damper	1
5	54110087	Hood Wall Mounting Bracket	1
6	54190040	Single Blower Mounting Plate	1
7	56210062	Wiring Box Cover	1
8	54200018	Wiring Box	1
10	56200051	Component Box	1
11	11010154	Control Board	1
12	56210063	Component Box Cover	1
13	56200085	Electrical Box	1
14	11030076	Electrical Cord	1
15	50210036	Pro Baffle Filter	2
16	50140108	Interior Access Panel	2
17	P12010008	LED Light Bulb, E26, 4W	2
18	54140157	Mood Light Socket Bracket	2
19	12100018	Mood Light Socket	2
20	50110124	Bottom Glass Panel	2
21	Z0B0052	Swivel LumiLight LED, 6W	4
22	11000172	Switch Assembly	1
22-1	01020056	Screw, Carriage, Switch Housing	2
22-2	00100003	Nut, Switch Housing	2
23	05000092	Hardware Packet	1