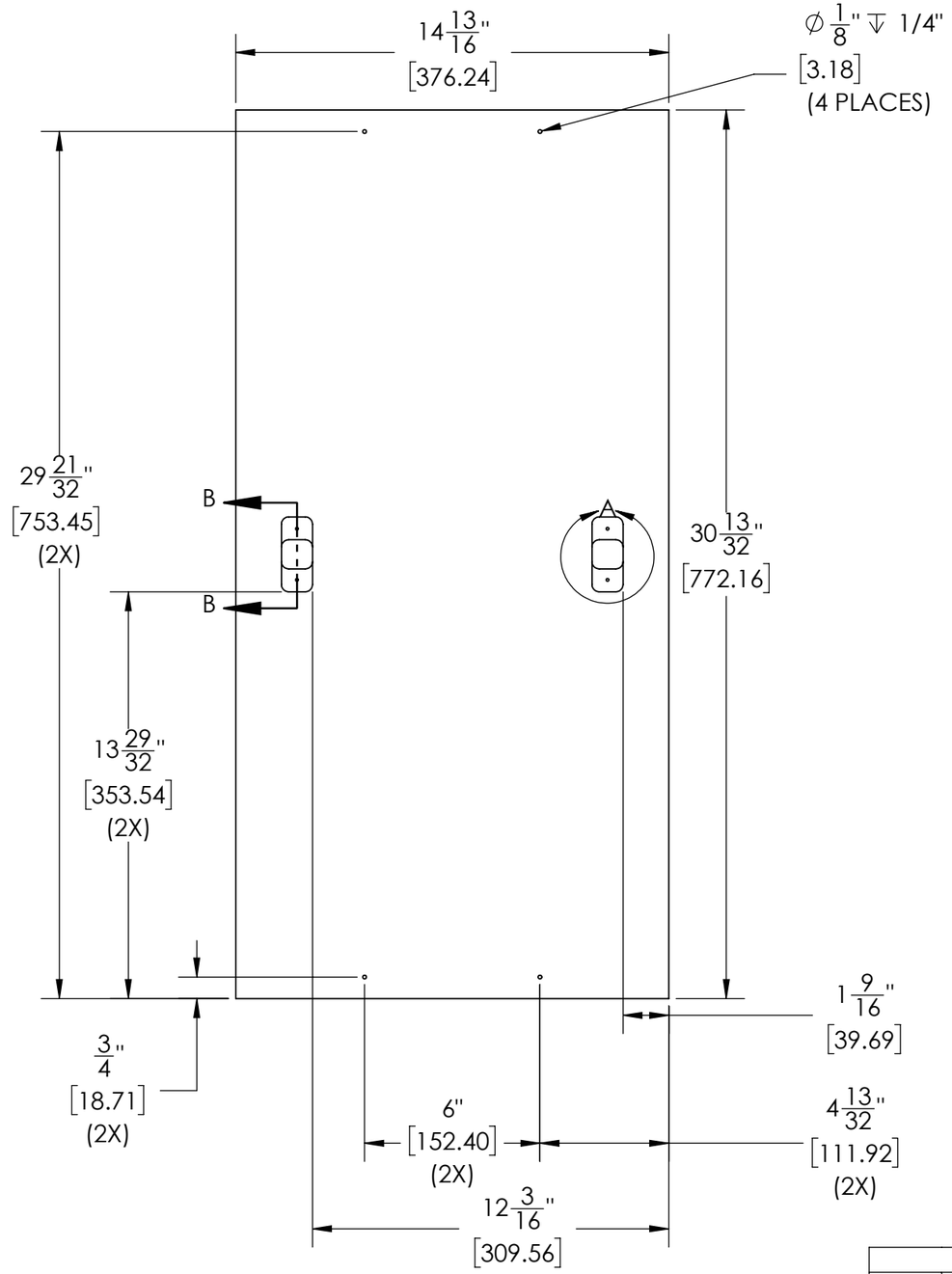


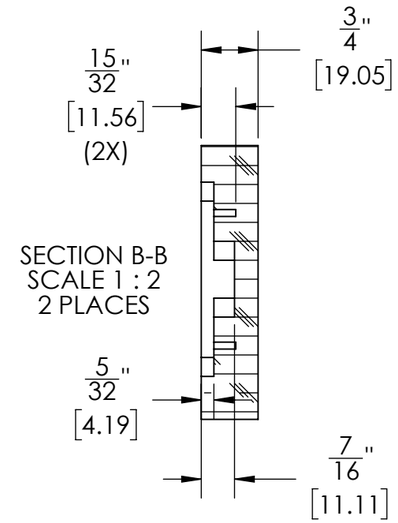


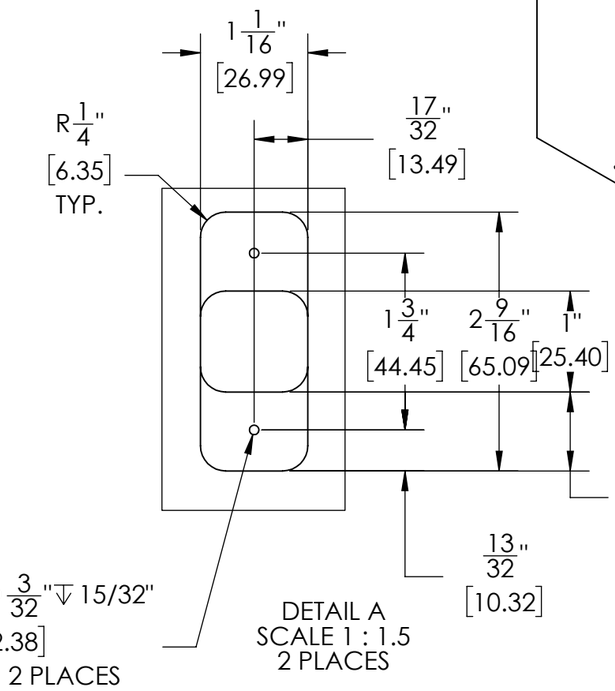


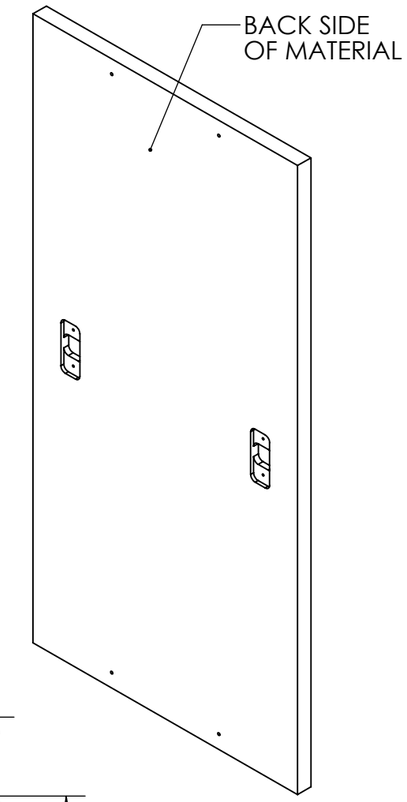


REVISIONS

| REV | ECO | DESCRIPTION | DESIGNER | DATE | APPROVED BY |
|---|---|---|---|---|---|
| A | 2025-6769 | NEW RELEASE | kyle.shimel | 10/14/2025 | kyle.shimel |
| B | 2026-7052 | ADDED LOCKING PAGES | kyle.shimel | 06/08/2026 | kyle.shimel |

PART NUMBER
1055255

DRAWING NUMBER
1055255

DESCRIPTION
OVERLAY, TEMPLATE, PANEL READY, SOLID DOOR, 15IN, UC, GEN5

GAUGE: ga | WEIGHT: 6.803 LBS | OVERALL DIMENSIONS: L X W X H | REQ QUAL MFG: NO

MATERIAL: WOOD OR SOLID SURFACES

REFERENCE:

SCALE: 1:8

SHEET 1 OF 5

**Perlick Corporation** **Milwaukee, Wisconsin**

UNLESS OTHERWISE SPECIFIED:
DIMENSIONS ARE IN INCHES TOLERANCES:
.X = ±0.1 Ang = ±0.5
.XX = ±0.03 Frac = ±1/64
.XXX = ±0.015
BREAK SHARP EDGES - .015 X 45°
RADIUS SHARP FILLETS - .015 TO .031

HOLES: Ø.0135 THRU Ø.125: ±.004
Ø.1260 THRU Ø.250: ±.005
Ø.2510 THRU Ø.500: ±.006
Ø.5010 THRU Ø.750: ±.008
Ø.7510 THRU Ø1.000: ±.010
Ø1.001 & UP: ±.012

THIS DOCUMENT / PUBLICATION / SOFTWARE / DRAWING CONTAINS PROPRIETARY INFORMATION WHICH IS THE PROPERTY OF THE PERLICK CORPORATION. IT MAY NOT BE REPRODUCED OR TRANSMITTED IN ANY FORM, ELECTRONIC OR MECHANICAL, INCLUDING PHOTOCOPYING, RECORDING, OR USED IN ANY INFORMATION STORAGE, TRANSMISSION, OR RETRIEVAL SYSTEM, WITHOUT WRITTEN PERMISSION FROM THE PERLICK CORPORATION. COPYRIGHT 2015 PERLICK CORPORATION. ALL RIGHTS RESERVED.

# RIGHT HINGE LOCK FEATURE

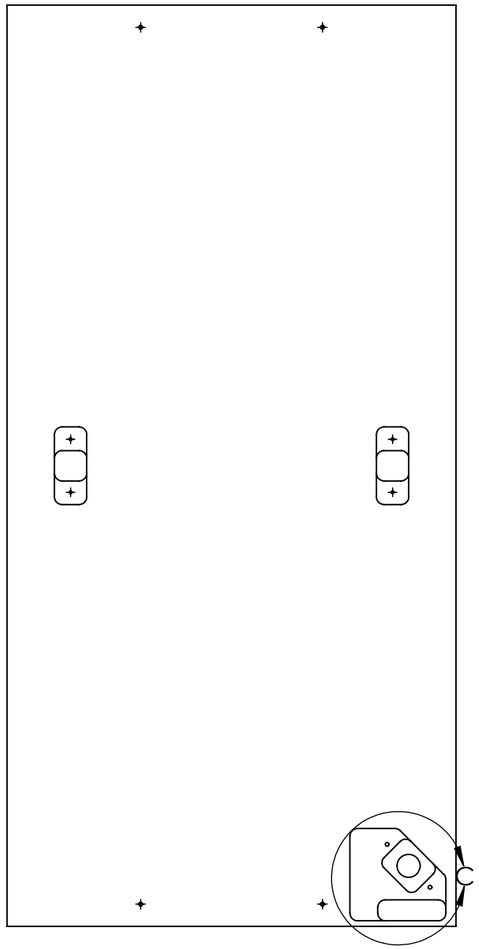


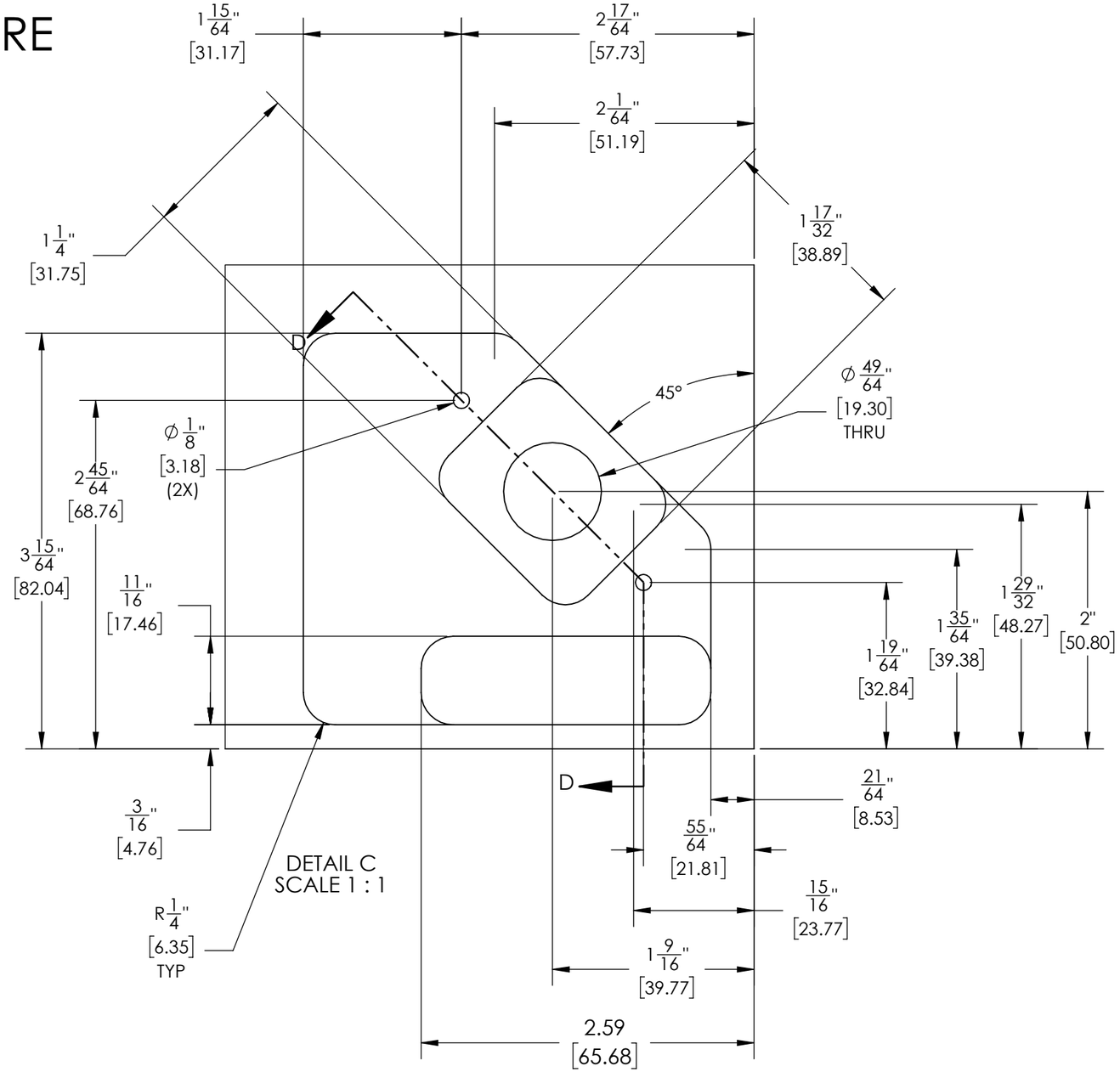


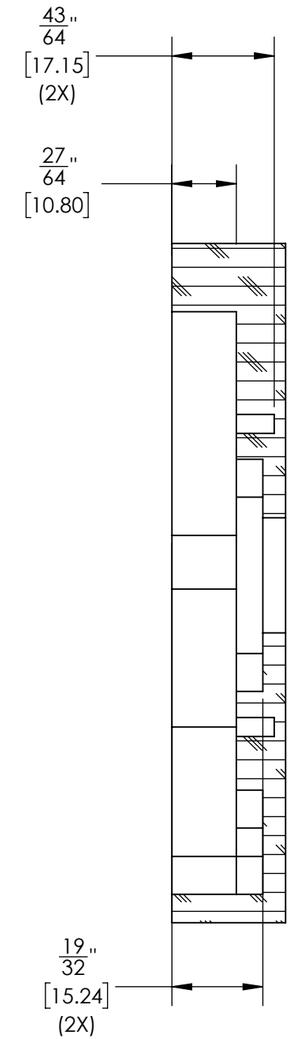


SECTION D-D
SCALE 1 : 1

| PART NUMBER | DRAWING NUMBER |
|---|---|
| 1055255 | 1055255 |

DESCRIPTION
OVERLAY, TEMPLATE, PANEL READY, SOLID DOOR, 15IN, UC, GEN5

| GAUGE: ga | WEIGHT: 6.803 LBS | OVERALL DIMENSIONS: L X W X H | REQ QUAL MFG: NO |
|---|---|---|---|

MATERIAL: WOOD OR SOLID SURFACES

REFERENCE:

SCALE: 1:8

SHEET 2 OF 5

**Perlick Corporation** **Milwaukee, Wisconsin**

UNLESS OTHERWISE SPECIFIED:
DIMENSIONS ARE IN INCHES TOLERANCES:
.X = ±0.1 Ang = ±0.5
.XX = ±0.03 Frac = ±1/64
.XXX = ±0.015
BREAK SHARP EDGES - .015 X 45°
RADIUS SHARP FILLETS - .015 TO .031

HOLES: Ø.0135 THRU Ø.125: ±.004
Ø.1260 THRU Ø.250: ±.005
Ø.2510 THRU Ø.500: ±.006
Ø.5010 THRU Ø.750: ±.008
Ø.7510 THRU Ø1.000: ±.010
Ø1.001 & UP: ±.012

THIS DOCUMENT / PUBLICATION / SOFTWARE / DRAWING CONTAINS PROPRIETARY INFORMATION WHICH IS THE PROPERTY OF THE PERLICK CORPORATION. IT MAY NOT BE REPRODUCED OR TRANSMITTED IN ANY FORM, ELECTRONIC OR MECHANICAL, INCLUDING PHOTOCOPYING, RECORDING, OR USED IN ANY INFORMATION STORAGE, TRANSMISSION, OR RETRIEVAL SYSTEM, WITHOUT WRITTEN PERMISSION FROM THE PERLICK CORPORATION. COPYRIGHT 2015 PERLICK CORPORATION. ALL RIGHTS RESERVED.

# LEFT HINGE LOCK FEATURE

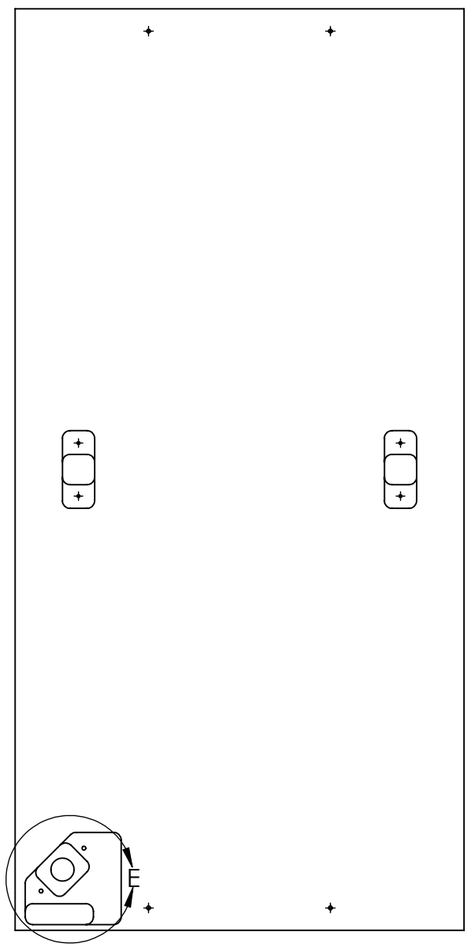


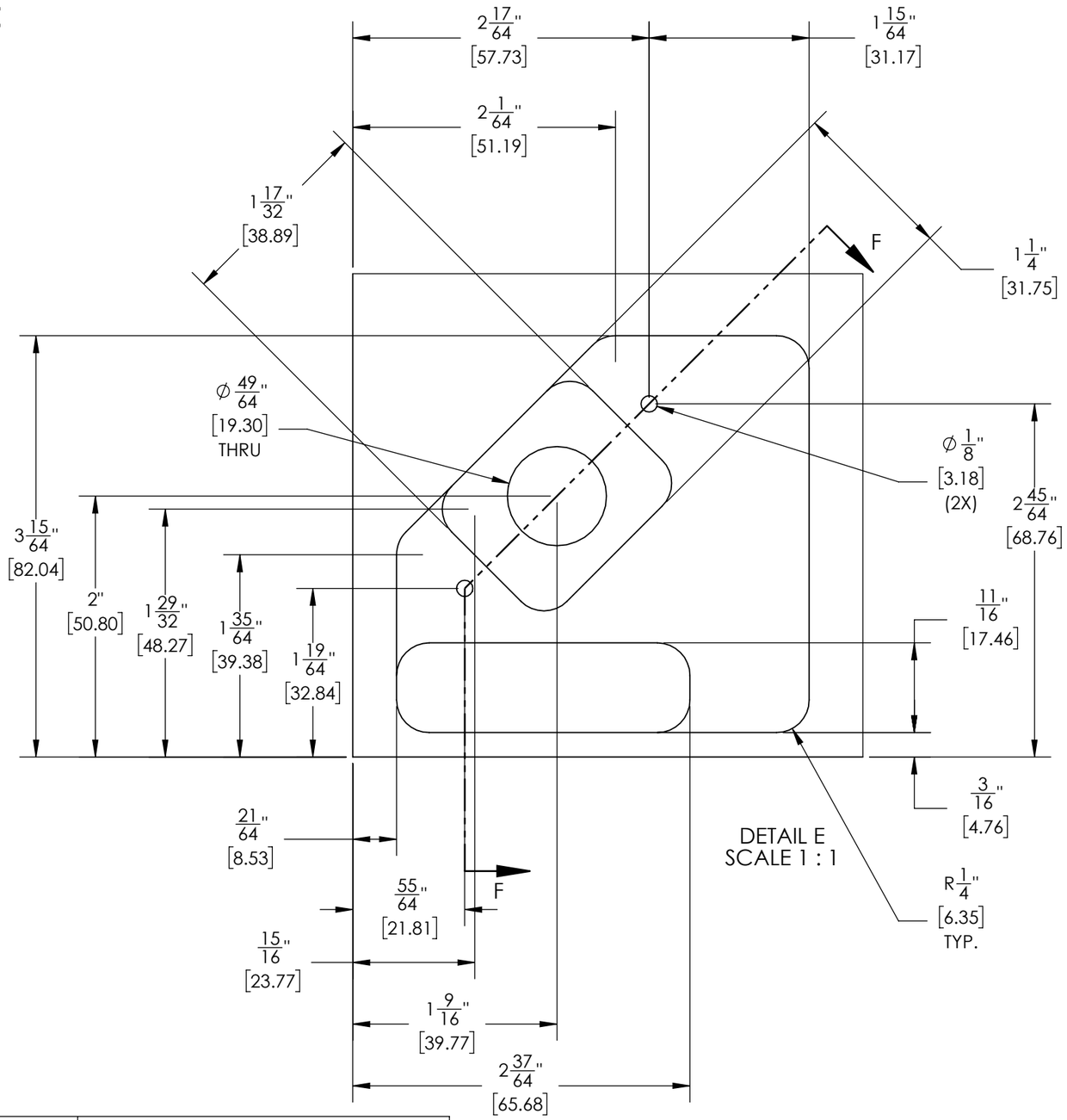


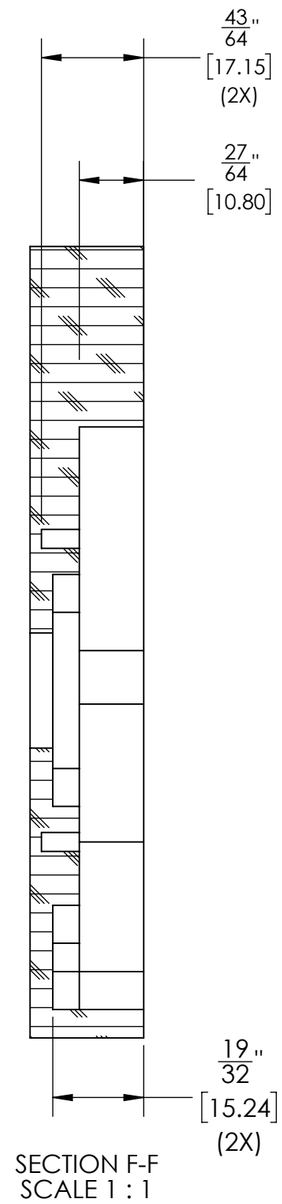


| PART NUMBER | DRAWING NUMBER |
|---|---|
| 1055255 | 1055255 |

DESCRIPTION
OVERLAY, TEMPLATE, PANEL READY, SOLID DOOR, 15IN, UC, GEN5

| GAUGE: ga | WEIGHT: 6.803 LBS | OVERALL DIMENSIONS: L X W X H | REQ QUAL MFG: NO |
|---|---|---|---|

MATERIAL: WOOD OR SOLID SURFACES

REFERENCE:

SCALE: 1:8

SHEET 3 OF 5

**Perlick Corporation** **Milwaukee, Wisconsin**

UNLESS OTHERWISE SPECIFIED:
DIMENSIONS ARE IN INCHES TOLERANCES:
.X = ±0.1 Ang = ±0.5
.XX = ±0.03 Frac = ±1/64
.XXX = ±0.015
BREAK SHARP EDGES - .015 X 45°
RADIUS SHARP FILLETS - .015 TO .031

HOLES: Ø.0135 THRU Ø.125: ±.004
Ø.1260 THRU Ø.250: ±.005
Ø.2510 THRU Ø.500: ±.006
Ø.5010 THRU Ø.750: ±.008
Ø.7510 THRU Ø1.000: ±.010
Ø1.001 & UP: ±.012

THIS DOCUMENT / PUBLICATION / SOFTWARE / DRAWING CONTAINS PROPRIETARY INFORMATION WHICH IS THE PROPERTY OF THE PERLICK CORPORATION. IT MAY NOT BE REPRODUCED OR TRANSMITTED IN ANY FORM, ELECTRONIC OR MECHANICAL, INCLUDING PHOTOCOPYING, RECORDING, OR USED IN ANY INFORMATION STORAGE, TRANSMISSION, OR RETRIEVAL SYSTEM, WITHOUT WRITTEN PERMISSION FROM THE PERLICK CORPORATION. COPYRIGHT 2015 PERLICK CORPORATION. ALL RIGHTS RESERVED.

# MOUNTING HOLE LOCATIONS FOR OTHER METAL BASED OVERLAYS

NOTE:

1. HOLE LOCATIONS ARE MEANT FOR A M5X.8, 4MM LOW-PROFILE SHOULDER BOLT WHICH ACTS AS AN EXTRA INSTALLATION AID. CUSTOMER/FABRICATOR/INSTALLER MAY DETERMINE HOLE SIZE AND MOUNTING OPTIONS DEPENDING ON THE MATERIAL BEING USED.

SHOULDER BOLT
PERLICK P/N: 1053729

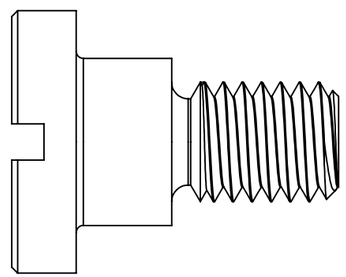

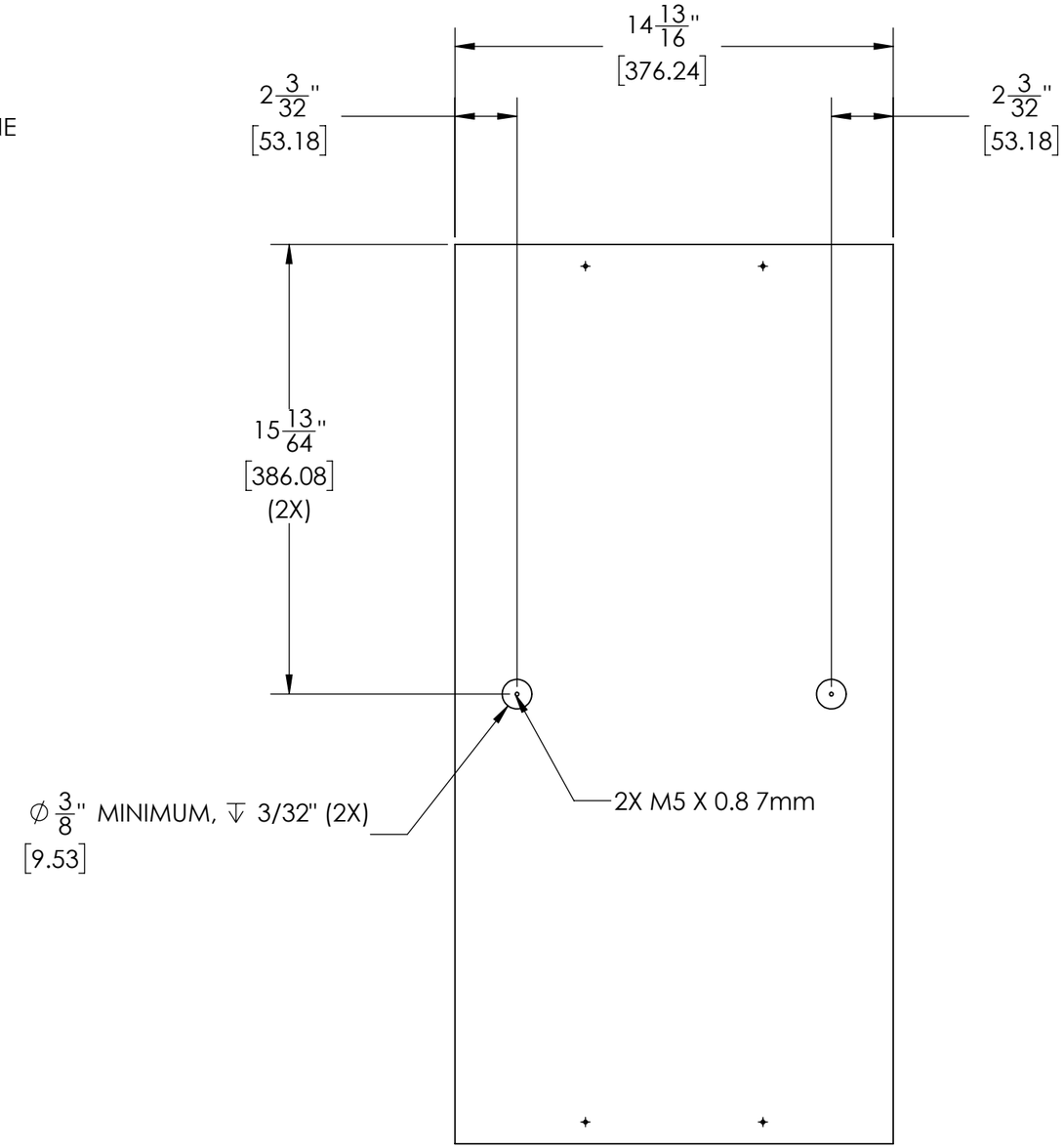


| PART NUMBER | DRAWING NUMBER |
|---|---|
| 1055255 | 1055255 |

DESCRIPTION
OVERLAY, TEMPLATE, PANEL READY, SOLID DOOR, 15IN, UC, GEN5

| GAUGE: ga | WEIGHT: 6.803 LBS | OVERALL DIMENSIONS: L X W X H | REQ QUAL MFG: NO |
|---|---|---|---|

MATERIAL: WOOD OR SOLID SURFACES

REFERENCE:

SCALE: 1:8

SHEET 4 OF 5

UNLESS OTHERWISE SPECIFIED:
DIMENSIONS ARE IN INCHES TOLERANCES:
.X = ±0.1 Ang = ±0.5
.XX = ±0.03 Frac = ± 1/64
.XXX = ±0.015
BREAK SHARP EDGES - .015 X 45°
RADIUS SHARP FILLETS - .015 TO .031

HOLES: Ø.0135 THRU Ø.125: ±.004
Ø.1260 THRU Ø.250: ±.005
Ø.2510 THRU Ø.500: ±.006
Ø.5010 THRU Ø.750: ±.008
Ø.7510 THRU Ø1.000: ±.010
Ø1.001 & UP: ±.012

**Perlick Corporation** **Milwaukee, Wisconsin**

THIS DOCUMENT / PUBLICATION / SOFTWARE / DRAWING CONTAINS PROPRIETARY INFORMATION WHICH IS THE PROPERTY OF THE PERLICK CORPORATION. IT MAY NOT BE REPRODUCED OR TRANSMITTED IN ANY FORM, ELECTRONIC OR MECHANICAL, INCLUDING PHOTOCOPYING, RECORDING, OR USED IN ANY INFORMATION STORAGE, TRANSMISSION, OR RETRIEVAL SYSTEM, WITHOUT WRITTEN PERMISSION FROM THE PERLICK CORPORATION. COPYRIGHT 2015 PERLICK CORPORATION. ALL RIGHTS RESERVED.
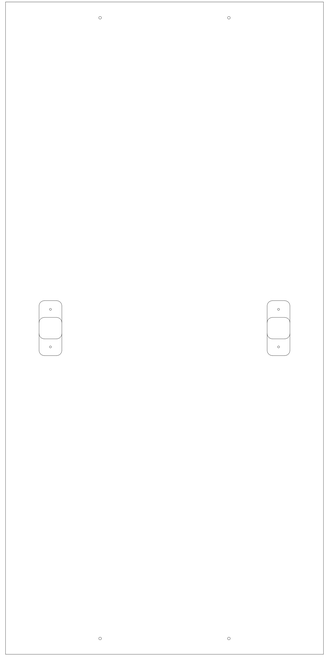
1055255
REV 'B'
1:1