H30RSS

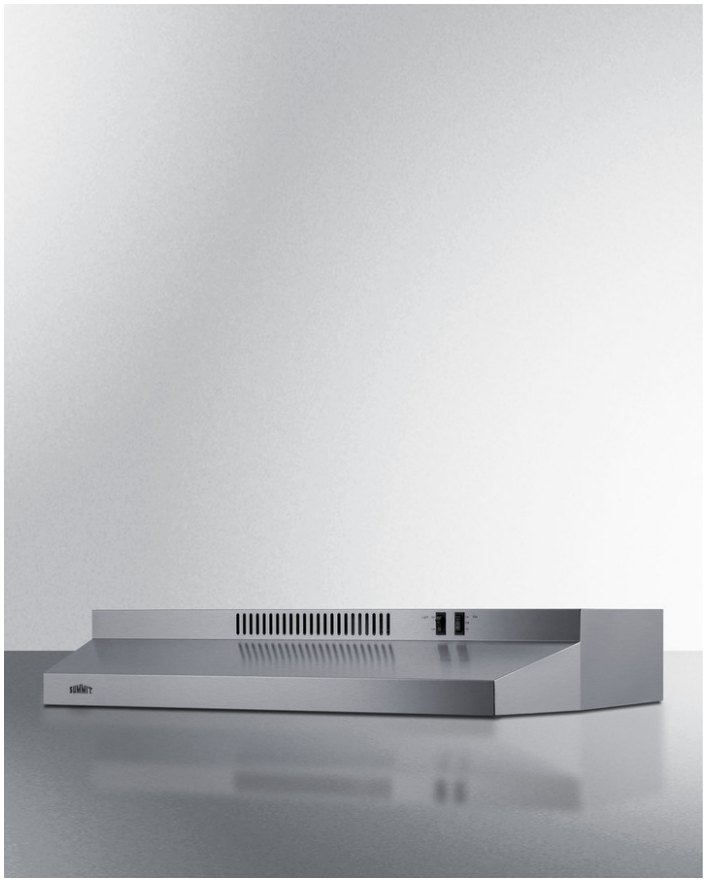

5.13" x 29.88" x 18.63" (H x W x D)

30 inch wide under cabinet convertible range hood for ducted or ductless use in stainless steel

Highlights:

30 inch wide pairs well with a variety of ranges and cooktops

Stainless steel construction for elegant durability

Convertible from top or rear venting into non-vented recirculating mode

Product Features:

Under cabinet range hood	Low profile design offers a classic way to finish your kitchen
30 inch width	Sized for use over 30 inch cooking surfaces (additional sizes available)
Convertible design	Can be used for ducted venting to the outside or recirculating ventilation where no external venting is possible
Easy 1-step conversion	Ships pre-set for recirculating mode but can be converted for ducted use in less than a minute
Versatile top or rear exhaust	Ships for standard 3 1/4" x 10" vertical or horizontal exterior venting and convertible to a 6" or 7" round vertical venting with a transition (not included)
Stainless steel finish	Durable construction in an attractive style with a horizontal grain
Two-speed fan	High and low setting to allow proper ventilation of your kitchen as needed
Light & bulb included	Includes an incandescent bulb to help illuminate your cooking surface
Removable metal grease filter	Easy installation and detaching allows you to properly clean the filter for optimum efficiency

SUMMIT APPLIANCE DIVISION, FELIX STORCH, INC. | ISO 9001:2015 Certified
770 Garrison Avenue Bronx, NY 10474 USA **TEL** 718-893-3900 **FAX** 844-478-8799 info@summitappliance.com **www.summitappliance.com**

SUMMIT

H30RSS Specifications:

Overview	
Nominal Height	6.0" (15 cm)
Height of Cabinet	5.13" (13 cm)
Nominal Width	30.0" (76 cm)
Width	29.88" (76 cm)
Nominal Depth	19.0" (48 cm)
Depth	18.63" (47 cm)
Cabinet	Stainless Steel
US Electrical Safety	ETL
Canadian Electrical Safety	ETL-C
Voltage/Frequency	115 V AC/60 Hz
Weight	12.0 lbs. (5 kg)
Parts & Labor Warranty	1 Year
UPC	761101085081
Range Hood	
Venting	Convertible
Controls	Dial
Light	Yes
Number of Lights	1
Light Type	Incandescent
Number of Fan Speeds	2
Duct Shape	3"1/4" x 10" rectangular or 6/7" round with transition

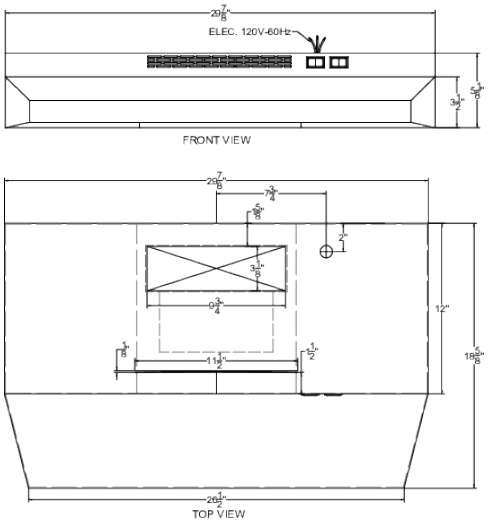

SUMMIT APPLIANCE DIVISION, FELIX STORCH, INC. | ISO 9001:2015 Certified
770 Garrison Avenue Bronx, NY 10474 USA **TEL** 718-893-3900 **FAX** 844-478-8799 info@summitappliance.com **www.summitappliance.com**