HC 1580G

Fully Integrated Appliances

LIEBHERR

Refrigeration and Freezing

GERMAN ENGINEERING

ENERGY STAR

home.liebherr.com



	HC 1580G
Energy consumption (kWh / y)	530
Estimated Yearly Energy Cost* in US $	74
Sound rating** dB(A)	39
Total refrigerator capacity cu.ft. (l)	9.8(278)
BioFresh compartment cu.ft. (l)	-
Freezer capacity cu.ft. (l)	4.3(122)
Electronic control	MagicEye with digital temp. display, touch electronic
Defrost type	Automatic
Interior light	LED
Number of shelves	3 + bottle racks
Number of door racks	3
Number of BioFresh drawers	-
Number of freezer drawers	2 with LED lighting
Refrigerator Temperature range °F (°C)	+36°F to +43°F (+2°C to +6°C)
Freezer Temperature range °F (°C)	+7°F to -17°F (-14°C to -27°C)
Water filter	-
Ice maker	Fixed water connection
Ice cube output lbs. (kg.)	2.6(1.2)
Ice cube stock lbs. (kg.)	6(2.7)
Door hinges	right
Product dimensions	
in inch (H / W / D)	79 13/16“/29 13/16“/24“
in cm (H / W / D)	202.4/75.7/61
Cut out dimensions	
in inch (H / W / D)	80“-81 5/8“ / 30“ / 25“
in cm (H / W / D)	203.2-207.2/76.2/63.5
Net weight lbs. (kg)	324.1 (159)
Voltage V / Hz	115/60

* Energy Cost will depend on utility rates and use. Estimated energy cost based on a national average electricity cost of 14 cents per KWh.
** Noise output – according to EN 60704-3

(08/2026)

Accessories

Water Filter	9880980/7440002/ 9883057
Stainless Steel Round Handles	9900279
Brushed Aluminum Square Handles	9900281
Door Stopper 90*	9096699
Stainless Steel Panels Freezers	9900283
Stainless Steel Panels Refrigerators 80”	9900287
Stainless Steel Panels Refrigerator 84”	9904367

Features

No Frost

Food is frozen with chilled, recirculating air, while expelling humidity. As a result, the freezer is always free of ice, ensuring long-term freshness.

Duo Cooling

Lengthen the shelf life and preserve the flavor of your foods with a dual refrigeration system that creates ideal conditions in both the refrigerator and freezer.

Ice Maker

Liebherr’s automatic IceMaker produces perfect ice cubes and keeps a constant supply on hand for every occasion.

Telescopic Rails

Store food securely within reach thanks to fully extendable pull-out drawers. The SoftTelescopic system provides convenient and reliable self-retraction with soft closing.

Diagrams

Product Dimensions

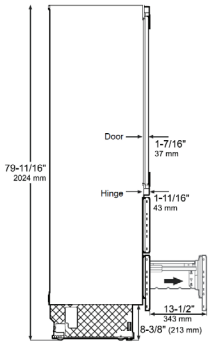

Height can be increased by 1-1/2“ (40 mm) by turning the levelling feet at the front and the height adjustable roller units at the appliance rear.

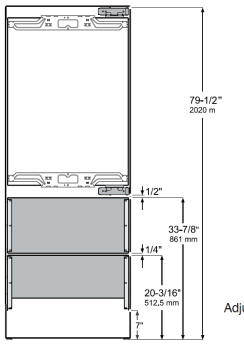

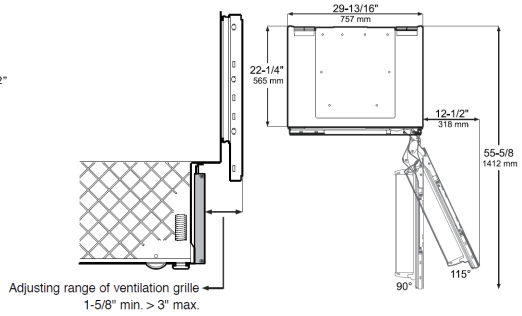

Allow door swing clearance at locations next to a wall.

The refrigerator door must open to a minimum of 90° to allow the crispers to open and the shelves to be removed.

Panel Dimensions

Inset Installation Style

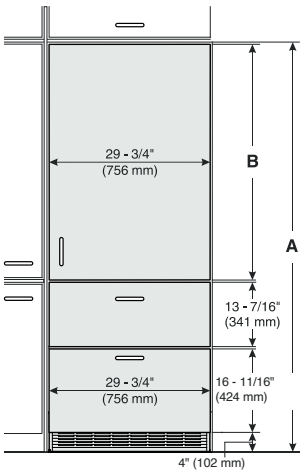

Frameless Installation Style

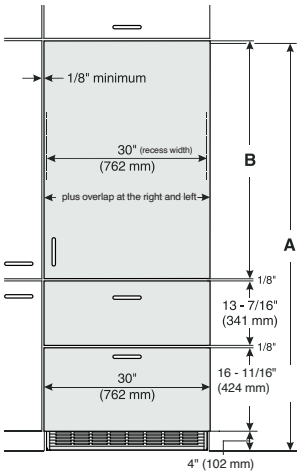

Product also allows installation with Toe kick height of 2" (50mm) to 6 11/16" (170mm).
To define the panel height other than 4" (102mm) toe kick, consider 20 11/16" (526mm) - toe kick height

Cabinet opening A	Refrigerator door panel B
80“	45-1/2“ (1156 mm)
84“	49-1/4“ (1251 mm)

Cabinet opening A	Refrigerator door panel B
80“	45-5/8“ (1159 mm)
84“	49-3/4“ (1264 mm)

Minimum panel thickness is 5/8“ (16 mm).

Maximum panel thickness is 3/4“ (20 mm).

Maximum weight of the refrigerator panel is 60 lbs (27 kg).

Maximum weight of each freezer panel is 26.5 lbs (12 kg).

Cutout Dimensions

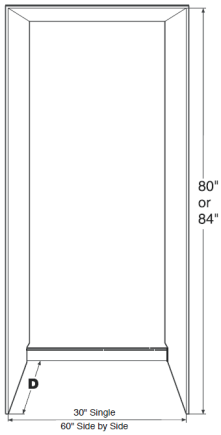

IMPORTANT
Factory available stainless steel panels are designed for an inset installation only and require a cabinet / gable depth of 24 - 3/4“.

Inset cabinet Depth D	
24“ + panel thickness	24“

Ventilation Requirements



The appliance do not require ventilation considerations in the cabinetry. The required airflow is directed through the toe kick base. It is important to use the provided cover grille for the ventilation opening. This opening must not be covered.

Subject to modification. For up-to-date information, visit home.liebherr.com.
Specifications are for planning purposes only. For more detailed information, refer to installation instructions or Design Guide.

PFAS