MRWC224 - 24" WINE REFRIGERATOR

THE ESSENTIAL COLLECTION



DESIGN

Cylindrical door pull on stainless steel model.

Matte black interiors with **stainless steel accents** on wine racks.

Panel-ready model accepts custom door panel.

Zero-clearance, low-profile pin hinges on stainless steel models, panel-ready models require additional clearance.

FEATURES

Built for both **indoor & outdoor use.**

Carbon filter for enhanced air quality and odor reduction.

Center Cabinet Vertical Lighting: Complete illumination for full visibility throughout the entire interior.

Door alarm activates when the door is left open.

Door lock provides added security.

Effortless Entry Door: Minimizes the physical effort needed, enhancing ease of use for all family members.

Electronic touch control enables precise temperature selection from **34°F to 61°F.**

Evenly distributed forced-air refrigeration system delivers rapid cool down and temperature stability.

Field reversible door is shipped right-hand hinged.

Four leveling legs adjustable up to 1 inch.

Low-E coated, argon gas filled, double thermopane glass door provides protection from harmful UV light.

Sabbath Mode disables interior lights, alarms, and digital displays while maintaining consistent cooling performance.

Six-color multi-point LED lighting in adjustable white: bright white, warm white, cool white, and light blue, deep blue, and teal.

STORAGE

5.1 cu. ft. capacity stores up to **55 wine bottles**.

Additional **lower storage area.**

Six full-extension, durable **wire wine racks** on ball-bearings.

CAPACITY

Volume	5.1 cu. ft.
Wine Bottles (750 mL)	55

DIMENSIONS

Product Depth	22 9/16” (57.3 cm)
Product Height (Min.)	33 5/8" (85.4 cm)
Product Width	23 1/2" (60 cm)
Product Weight	125 lbs
Shipping Depth	31" (78.7 cm)
Shipping Height	37" (94 cm)
Shipping Width	28" (71.1 cm)
Shipping Weight	145 lbs

CUSTOM PANEL DIMENSIONS

Panel Height	29" (73.7 cm)
Panel Thickness	5/8" (1.6 cm) or 3/4" (1.9 cm)
Panel Width	23 1/8" (58.7 cm)
Panel Weight (Max.)	20 lbs
Panel Type	2" (5.1 cm) frame panel

SUSTAINABILITY

Refrigerant Type	R600a
GWP (Global Warming Potential)	3 (very low)

TECHNICAL DETAILS

Cord Length	6 ft.
Electrical Requirements	115V / 60 Hz / 15A

WARRANTY

2 year parts & labor warranty / 6 year compressor parts warranty (see complete warranty for details).

MRWC224 - 24” WINE REFRIGERATOR

THE ESSENTIAL COLLECTION

INSTALLATION

No additional clearance is needed for ventilation.

Do not obstruct front grille air flow.

Panel ready model requires 3/4" or 5/8" custom panel and handle (not supplied by Marvel).

Add 5/8” to the width for panel ready models with 3/4” integrated panel.

PRODUCT DIMENSIONS

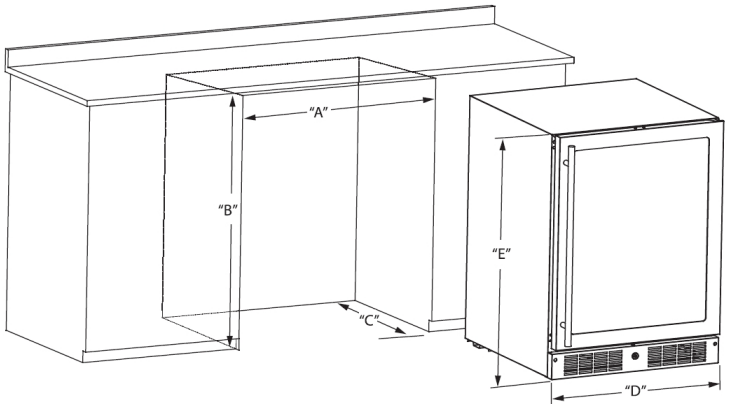

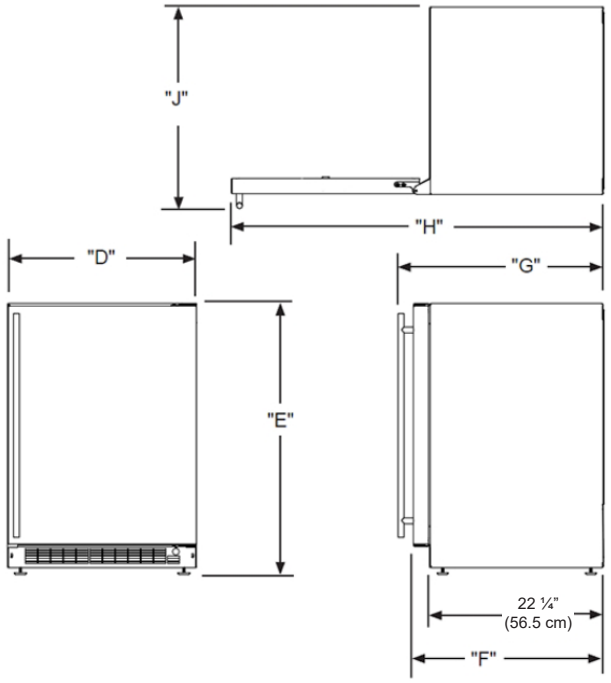

Line art not to scale.
Intended for general reference only.

ROUGH IN DIMENSIONS

"A"	"B"	"C"
24"	34" to 35"	24"
(61 cm)	(86.4 cm to 88.9 cm)	(61 cm)

CABINET DIMENSIONS

"D"	"E"	"F"	"G"	"H"	"J"
23 1/2"	33 7/8" to 34 7/8"	22 9/16"*	24 1/4"*	45”*	25 1/4”*
(60 cm)	(86 cm to 88.6 cm)	(57.3 cm)	(61.6 cm)	(114.3 cm)	(64.1 cm)

*Stainless steel model dimensions only. For panel-ready models, see the owner’s guide online at marvelrefrigeration.com.

MODELS



MRWC224-SG31A

Stainless Steel Frame Glass



MRWC224-IG31A

Panel Ready Frame Glass