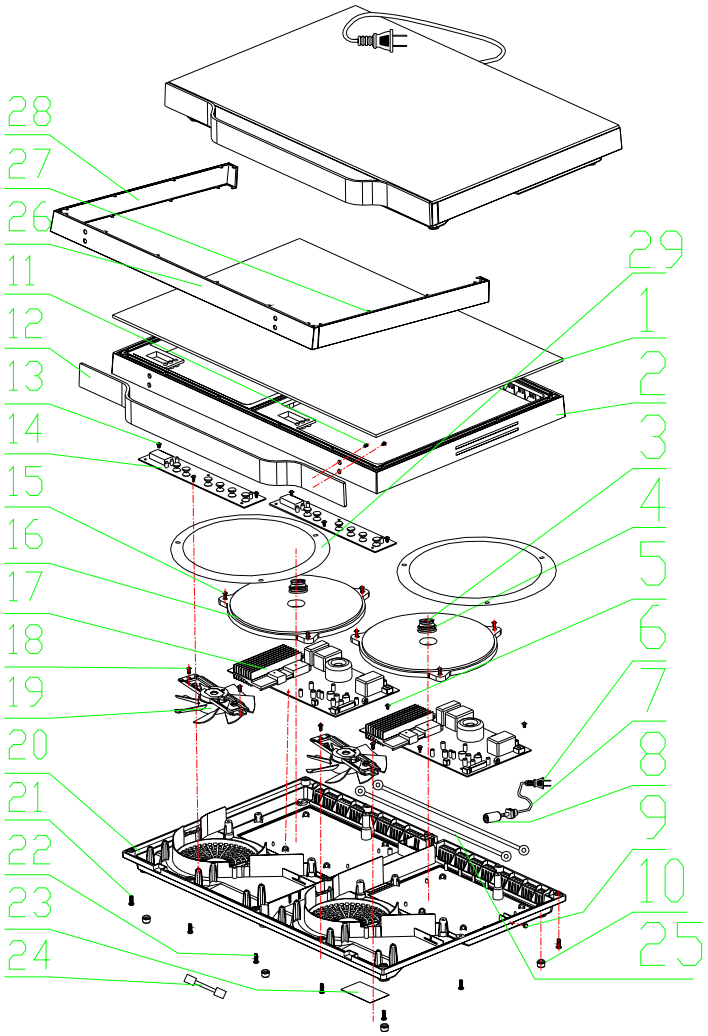

No	Dw No	Name	Material	Spec	Quantity	Wht	Remarks
29		Aluminum ring		8×4mm	2		
28		Stainless steel frame upper up	SUS304	0×4mm	1		
27		Stainless steel frame upper up	SUS304	0×4mm	1		
26		Stainless steel frame upper up	SUS304	0×4mm	1		
25		Power Cable			2		
24		Screw			1		
23		Rating label		(on-SPV6)4	1		
22		Screw		(on-SPV6)4	1		
21		Screw	SUS304	SPV4	2		
20		Bracket	PP (RoHs)		1		
19		Fan		60×60×15, 4000 R/min.	2		
18		Screw		(washing) 3×10	4		
17		Power PCB			2		
16		Copper coil	Copper flush		2		
15		Screw		(washing) 5×16	6		
14		SPV6 PCB			2		
13		Screw		(washing) 3×7	14		
12		handle	aluminum alloy(6061)		1		
11		Screw		(washing) M4×6	4		
10		Rubber foot	silicon gel		6		
9		lower drawer	silicon gel		1		
8		magnet ring			1		
7		power cord	PVC	250V 2×0.1,0.5SPT-L=1.3M	1		
6		Plug			1		
5		screw		3×7×7	2		
4		PTC ceramic	silicon gel		2		
3		NTC sensor			2		
2		Top cover	ABS (RoHs)		1		
1		Ceramic plate	glass ceramics		1		

NO	DATE	SIGN	CHECK	REVISION	CONTENTS

UNIT	mm	DRAWN		PART NAME	exploded view
SCALE	1/1	DESIGNED			
TOLERANCE		CHECKED		MODEL	PIC 200N
Venpole		APPROVED		PART NO.	