SCFF53BCSSIM



34" x 23.63" x 23.75" (H x W x D)

Frost-free built-in undercounter all-freezer for residential or commercial use, with digital thermostat, stainless steel exterior, and lock

Highlights:

Factory installed icemaker provides a steady supply of ice

True frost-free operation saves you maintenance by preventing icy buildup

Flexible design allows built-in or freestanding use in 24" wide spaces

Product Features:

24" Wide Undercounter Freezer With Icemaker	Frost-free all-freezer in a 24" footprint for built-in or freestanding use
Frost-free operation	No-frost convenience eliminates the need to manually defrost the unit
Built-in capable	Make the best use of space by installing your freezer under the counter and flush with other cabinets
Factory installed icemaker	Produces a steady supply of ice for added entertaining convenience
Stainless steel wrapped cabinet	Durable construction with a professional look
Reversible stainless steel door	User-reversible door swing for added flexibility
Professional handle	Attractive chrome handle adds a touch of modern style
Digital thermostat	Electronic controls offer easy and intuitive temperature management
Recessed LED light	Elegant and efficient interior lighting automatically illuminates when the door is opened

SUMMIT

SCFF53BCSSIM Specifications:

Overview	
Nominal Height	34.0" (86 cm)
Height of Cabinet	34.0" (86 cm)
Nominal Width	24.0" (61 cm)
Width	23.63" (60 cm)
Nominal Depth	24.0" (61 cm)
Depth	23.75" (60 cm)
Depth with Handle	25.35" (64 cm)
Depth with door at 90°	45.63" (116 cm)
Capacity	4.72 cu.ft. (134 L)
Defrost Type	Frost-Free
Door	Stainless Steel
Cabinet	Stainless Steel
US Electrical Safety	ETL
Canadian Electrical Safety	ETL-C
Energy Usage/Year	390.0kWh/year
Amps	0.9
Plug Type	NEMA 5-15P (Right Angle)
Voltage/Frequency	115 V AC/60 Hz
Weight	95.0 lbs. (43 kg)
Parts & Labor Warranty	1 Year
Compressor Warranty	5 Years
UPC	761101056043
Freezer	
Door Swing	RHD
Reversible	Yes
Interior Height	25.75" (65 cm)
Interior Width	19.0" (48 cm)
Interior Depth	17.25" (44 cm)
Shelf Type	Chrome
Shelf Qty	3
Adjustable Shelves	Yes
Thermostat Type	Digital
Interior Light	Yes
Fan Type	Interior and Exterior
Refrigerant Type	R600a

Refrigerant Amount	1.24 oz.
High Side PSI	270.0
Low Side PSI	105.0
Star-K Certified	Yes
Sabbath Mode	Yes

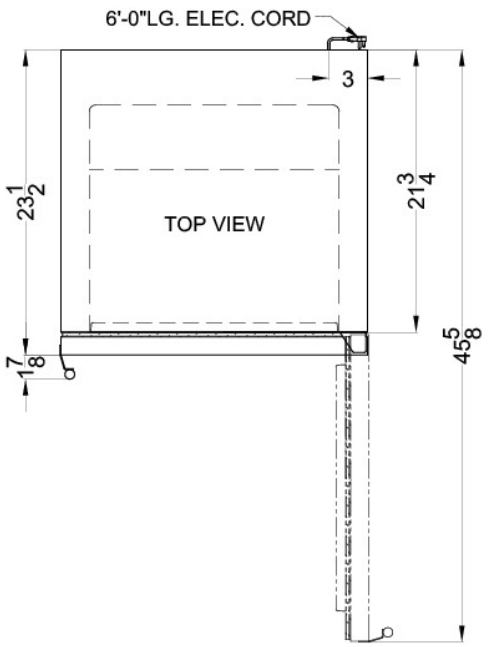

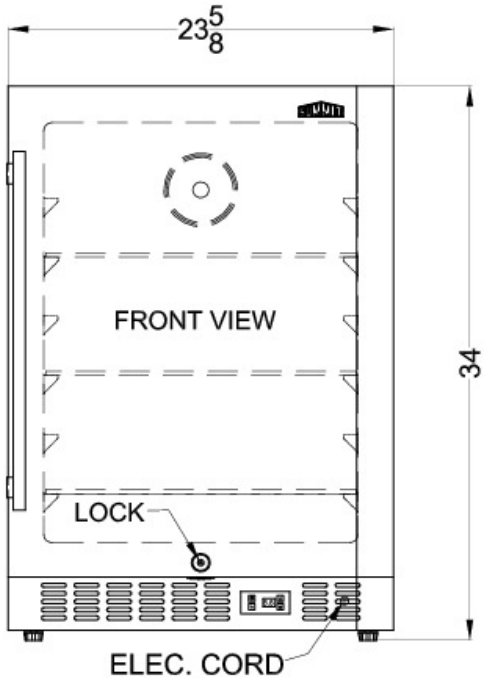

SUMMIT APPLIANCE DIVISION, FELIX STORCH, INC. | ISO 9001:2015 Certified
770 Garrison Avenue Bronx, NY 10474 USA **TEL** 718-893-3900 **FAX** 844-478-8799 info@summitappliance.com **www.summitappliance.com**