SHARP®

OPERATION MANUAL

30" SLIDE-IN GAS RANGE

MODELS: SSG3061JS, SSG3062DNS

30" Slide-In Gas Range: Models SSG3061JS, SSG3062DNS

CONTENTS

CUSTOMER ASSISTANCE **3**

US CONSUMER LIMITED WARRANTY **4**

SAFETY PRECAUTIONS **5**

USING NATURAL GAS 5
GROUNDING THE APPLIANCE 5
ANTI-TIP BRACKET 5

IMPORTANT SAFETY INSTRUCTIONS **6-9**

INSTALLATION AND MAINTENANCE 6
GENERAL SAFETY PRECAUTIONS 6
COOKTOP SAFETY 7
OVEN SAFETY 8
SELF CLEAN HAZARDS 8
ABOUT FOOD SAFETY 9
USDA RECOMMENDED TEMPERATURE 9

PARTS AND FEATURES **10-14**

TOP VIEW 10
FRONT VIEW 10
COOKTOP 11
CONTROL KEYPAD AND DISPLAY 11
SETTINGS 12
CONTROL LOCK 12
TIMER 12
OVEN LIGHT 12
SABBATH MODE 14
HOLD TO KEEP WARM SETTING 14

BEFORE OPERATING **15**

BEFORE FIRST USE 15
CONDITION OF THE UNIT 15
SERVICE AND REPAIR WARNING 15
PRODUCT DISPOSAL 15

COOKTOP USE **16-17**

COOKTOP BURNER BTU RATING (NATURAL GAS) 16
COOKTOP BURNER CONTROL 16

OVEN USE **18-24**

ABOUT OVEN COOKING 18
OVEN HEAT SOURCE BTU RATING (NATURAL GAS) 18
OVEN RACKS 18
COMPONENT COOLING FAN 19
OVEN DOOR 19
OVEN VENTS 19
OVEN CONDENSATION AND TEMPERATURE 19
COOKING WITH CONVECTION 20
ADVANTAGES OF CONVECTION COOKING 20
PREHEAT 21
BAKE 21
BROIL HI/LOW 21
PIZZA 21
AIR-FRY 21
CONVECTION BAKE 22
CONVECTION ROAST 22
KEEP WARM 22
PROOF 22
STEAM CLEAN 22
SELF CLEAN 23
DELAY 23
COOK TIME 23
PROBE 24

CLEANING AND MAINTENANCE **25-27**

COOKTOP CLEANING 25
CONTROL PANEL CLEANING 25
OVEN INTERIOR CLEANING 26
OVEN LIGHTS 26
DRAWER AND DOOR 27

TROUBLESHOOTING **28-29**

BEFORE YOU CALL 28

ERROR CODES **30**

CUSTOMER ASSISTANCE

UNITED STATES ONLY

REGISTER YOUR PRODUCT

Registering your new product is easy and offers benefits that help you get the most out of your Sharp product including:

- ✓ **Convenience**: If you ever need warranty support, your product information is already on file.
- ✓ **Communication**: Stay up to date with important notifications and special offers from SHARP.
- ✓ **Support**: Quickly access support content including Owner's Manuals, FAQ's, How-to Videos, and much more.

3 EASY WAYS TO REGISTER TODAY!

SCAN

Use the camera or QR code scanning application on your mobile device

Scan this QR Code on your mobile device

ONLINE

Visit our sites to learn more about your product at sharpusa.com and sbl.sharpusa.com

Visit http://www.sharpusa.com/register

CALL US

US **800-BE-SHARP**
800-237-4277

Contact a Sharp Advisor on the phone

PRODUCT SUPPORT

If you have questions about the setup or operation of your product, please refer to the corresponding section within this manual.

Additionally, visit https://support.sharpusa.com/s/ to access exclusive content about your product including:

→ FAQ's and How-To Videos
→ Find or Request Service
→ Extended Warranty Options
→ Downloads including the Installation Guide, Spec Sheet, and Owner's Manual

CONTACT US

If at any time you have questions or comments concerning your SHARP product, please contact the SHARP Customer Assistance Center. We are available to assist you through multiple contact methods for your convenience:

EMAIL
Available 24/7
US: sharpusa.com

See the Contact Us section on our sites

CHAT ONLINE

U.S. | https://support.sharpusa.com/s/

CALL US

US **800-BE-SHARP**
800-237-4277

Contact a Sharp Advisor on the phone

SHARP®

US CONSUMER LIMITED WARRANTY

SHARP ELECTRONICS CORPORATION ("Sharp") warrants to the first consumer purchaser ("Purchaser") that this SHARP brand product ("Product"), when shipped in its original container and sold or distributed in the United States by Sharp or an authorized Sharp dealer or reseller, will be free from defective workmanship and materials, and agrees that it will, at its option, either repair the defect or replace the defective Product or part thereof with a new or remanufactured equivalent at no charge to the Purchaser for parts or labor for the period(s) set forth below.

This limited warranty does not apply to any appearance items of the Product nor to the additional excluded item(s) set forth below nor to any Product the exterior of which has been damaged or defaced, which has been subjected to misuse, abnormal service or handling, or which has been altered or modified in design or construction.

In order to enforce the rights under this limited warranty, the Purchaser should follow the steps set forth below and provide proof of purchase to the servicer.

The limited warranty described herein is in addition to whatever implied warranties may be granted to Purchasers by law. ALL IMPLIED WARRANTIES INCLUDING THE WARRANTIES OF MERCHANTABILITY AND FITNESS FOR USE ARE LIMITED TO THE PERIOD(S) FROM THE DATE OF PURCHASE SET FORTH BELOW. Some states do not allow limitations on how long an implied warranty lasts, so the above limitation may not apply to you.

Neither the sales personnel of the seller nor any other person is authorized to make any warranties other than those described herein, or to extend the duration of any warranties beyond the time period described above on behalf of Sharp.

The warranties described herein shall be the sole and exclusive warranties granted by Sharp and shall be the sole and exclusive remedy available to the Purchaser. Correction of defects, in the manner and for the period of time described herein, shall constitute complete fulfillment of all liabilities and responsibilities of Sharp to the Purchaser with respect to the Product, and shall constitute full satisfaction of all claims, whether based on contract, negligence, strict liability or otherwise. In no event shall Sharp be liable, or in any way responsible, for any damages or defects in the Product which were caused by repairs or attempted repairs performed by anyone other than an authorized servicer. Nor shall Sharp be liable or in any way responsible for any incident or consequential economic or property damage. Some states do not allow the exclusion of incidental or consequential damages, so the above exclusion may not apply to you.

THIS LIMITED WARRANTY IS VALID ONLY IN THE FIFTY (50) UNITED STATES, THE DISTRICT OF COLUMBIA AND PUERTO RICO.

Your product model number & description	Model # SSG3061JS, SSG3062DNS or 30" Slide-In Gas Range. (Be sure to have this information available when you need service for your Product.)
Warranty period for this product:	One (1) year parts and labor including in-home service. Product must be accessible to provide service.
Additional item(s) excluded from warranty coverage (if any):	Non-functional accessories, service calls to your home to instruct how to use your Slide-In Gas Range, replace or repair house fuses or to correct house wiring, improper commercial use, installation, or maintenance, damage to the product caused by delivery, accident, modifications, fire, floods or acts of God.
Where to obtain service:	From a Sharp Authorized Servicer located in the United States. To find the location of the nearest Sharp Authorized Servicer, call Sharp toll free at 1-800-237-4277 (1-800-BE-SHARP).
What to do to obtain service:	In-home service is provided for one year from date of purchase. In-home service can be arranged by calling 1-800-BE-SHARP. Be sure to have Proof of Purchase available.

TO OBTAIN SUPPLY, ACCESSORY OR PRODUCT INFORMATION, CALL 1-800-BE-SHARP or visit www.sharpusa.com. SAVE THE PROOF OF PURCHASE AS IT IS NEEDED SHOULD YOUR APPLIANCE EVER REQUIRE WARRANTY SERVICE.

SAFETY PRECAUTIONS

⚠WARNING FIRE, EXPLOSION HAZARD

- NEVER store or use gasoline or other flammable vapors and liquids in the vicinity of this or any other appliance, as these materials may ignite and cause a fire or explosion causing property damage, personal injury or death.
- In the event of a fire or explosion, move away from the appliance immediately and call the local fire department. NEVER attempt to extinguish oil/grease fire with water.

USING NATURAL GAS

Installation and service must be performed by a qualified installer, service agency or the gas supplier. Have the installer show you where the gas shut-off valve is located.

⚠WARNING CARBON MONOXIDE HAZARD

- NEVER cover any slots, holes or passages in the oven bottom and NEVER cover an entire rack in the oven with materials such as aluminum foil, as doing so blocks airflow through the oven and may cause risk of carbon monoxide poisoning.
- The Slide-In Gas Range is preset for use with Natural Gas and can be converted for use with Propane (LP). Conversion for use with propane must be performed by a qualified technician in accordance with the installation instructions and local codes. The agency performing this conversion assumes responsibility for the conversion to propane use.
- To convert the range for use with Propane, have a qualified technician follow the included instructions with the LP Conversion kit.

GAS DETECTION

It is recommended to install a gas detector in any room with an appliance using natural gas or propane.

If gas is detected or you smell gas, leave the area of the odor and call the local gas company immediately. If the gas company is unreachable, call the fire department. In the meantime, follow these precautions:

- Extinguish all open flames.
- Leave the premises of the suspected leak and keep others away. Stay nearby until a gas company representative arrives.
- DO NOT use a phone inside the premises.
- DO NOT make a spark or flame with lighters, matches or candles. DO NOT smoke.
- DO NOT turn on any electrical switches, appliances or lights, as an electrical charge could create a spark.

Service must be performed by a qualified installer, service agency or the gas supplier.

GROUNDING THE APPLIANCE

The Slide-In Gas Range requires connection to a 3-prong, 120VAC, 60Hz grounded electrical source. The oven is equipped with a cord having a grounding wire with a grounding plug. It must be plugged into a wall receptacle that is properly installed and grounded in accordance with the National Electrical Code and local codes and ordinances. In the event of an electrical short circuit, grounding reduces risk of electric shock by providing an escape wire for the electric current.

⚠WARNING SHOCK HAZARD

- Improper use of the grounding plug can cause risk of electric shock. Do not use an extension cord. If the power supply cord is too short, have a qualified electrician or service technician install an outlet near the appliance.

If you have any questions about the grounding or electrical instructions, consult a qualified electrician or service technician.

ANTI-TIP BRACKET

⚠WARNING TIP-OVER HAZARD

- If the Anti-Tip Bracket is not installed, there is risk of the product tipping and causing injury if someone stands, sits or leans on the open door.
- To reduce the risk of tipping of this appliance from abnormal usage by excessive loading of the oven, the appliance must be secured by installing the Anti-Tip Bracket supplied. Please refer to the Installation Manual for more information.

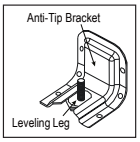

To check if the bracket is installed and engaged properly, open the oven door fully and gently apply medium force in the center of the handle until movement of the appliance is detected. Continue pressing until the Anti-Tip Bracket is engaged and movement stops. A small amount of movement is acceptable at the back of the appliance top, but it should be stable and not tip once the Anti-Tip Bracket is engaged. Stop pressing on the door and close the oven.

To check if the unit will not slide out, open the oven fully and apply gentle outward pressure. The unit should not slide toward you. If it does, refer to the Installation Manual.

READ AND SAVE THESE INSTRUCTIONS FOR FUTURE REFERENCE

IMPORTANT SAFETY INSTRUCTIONS

To reduce the risk of fire, electrical shock, injury to persons or damage when using the product, follow basic precautions, including the following.

INSTALLATION AND MAINTENANCE

1 This appliance must be properly installed and electrically grounded by a qualified technician. Refer to the Installation Manual for instructions to connect to a properly grounded outlet.

2 This appliance should be serviced only by a qualified service technician. Contact the nearest authorized service center for examination, repair or adjustment.

3 Do not repair or replace any part of the oven yourself unless specifically recommended. Refer service to an authorized servicer.

4 If a burner is not ignited, ensure the knob is in the **Off** position. When a control knob is in use to ignite or control a burner, a LED illuminates behind the knob. In the event of a power outage, the LED does not function. If a burner does not ignite, return the knob to the **Off** position.

5 Do not operate this appliance if it is not working properly or has been damaged until an authorized servicer has examined and repaired it.

6 Install or locate this appliance only in accordance with the Installation Manual. Do not store or use this appliance outdoors or in areas near water, such as near a kitchen sink, in a wet basement, near a swimming pool or similar locations.

7 DO NOT install this appliance with a ventilation system that blows air downward toward the appliance. Use of a ventilation system that blows air downward toward the appliance can cause ignition and combustion problems with gas cooking appliances and cause risk of personal injury or unintended operation.

8 Use this appliance only for its intended use as described in this manual. Do not use corrosive chemicals, vapors or nonfood products in this appliance. This type of oven is specifically designed to heat or cook. It is not designed for industrial or laboratory use. The use of corrosive chemicals in heating or cleaning will damage the appliance.

9 Do not allow grease or other flammable materials to accumulate in or on the range, as grease in the oven or on the cooktop may ignite.

10 Clean kitchen ventilating hoods frequently. Do not allow grease to accumulate on hood or filter.

11 Clean the cooktop with caution. To avoid steam burns, allow the cooktop to cool before wiping with wet sponge or cloth. Some cleaners produce noxious fumes if applied to a hot surface.

12 Do not use oven cleaners or protective coating on any part of this appliance.

13 Take care to not rub, damage or move the door gasket, which seals the connection between the door and the oven. Do not clean the door gasket with a scouring pad, knife or other abrasive object. If necessary, gently wipe with a damp, soft cloth. Chemicals such as detergents, bleach and degreaser will deteriorate the gasket seal.

14 Clean only parts and areas listed in the CLEANING AND MAINTENANCE section of this manual.

GENERAL SAFETY PRECAUTIONS

1 Read all instructions before using the appliance. Ensure that all users of the gas appliance understand the necessary precautions for use.

2 It is recommended to install a gas detector and smoke detector in any room with this appliance. Follow manufacturers' recommendations for installation.

3 To prevent accidents and achieve optimal ventilation, ensure sufficient space around the cooking area.

4 Do not store any flammable materials or temperature sensitive items inside oven or storage drawer or on top of or near cooktop, including paper, plastic, potholders, linens, wall coverings, curtains, drapes or cleaning chemicals.

5 Do not use this appliance to heat a room, as doing so may cause risk of carbon monoxide poisoning and overheating of the oven.

6 Children should not be left alone or unattended in the area of Slide-In Gas Range use. Do not allow children to play in or on or otherwise interact with the range.

7 Do not allow anyone to climb, stand, lean, sit or hang on any part of the appliance, especially the door, drawer or operation panel.

8 Do not store items of interest to children or pets in cabinets above a range or in the backguard of the range, as children or pets climbing on the range to reach items could be seriously injured or cause unintentional operation.

9 Close supervision is necessary when children interact with the Slide-In Gas Range. Teach children to not play with the knobs, controls or any other part of the appliance.

10 For personal safety, tie long hair back and never wear loose-fitting or hanging garments while using the appliance. Be careful when reaching for items stored over the appliance. Flammable material could be ignited and cause severe burns.

11 Use only dry potholders. Moist or damp potholders on hot surfaces may cause burns from steam. Do not let potholders touch hot surfaces. Do not use towels or other bulky cloth.

12 Always place oven racks in desired position while the oven is cool.

13 Keep hands and face clear when opening the oven door. Let hot air or steam escape before removing or replacing food, as hot air and steam can cause burns.

14 Use caution when opening and closing the oven door. The trim on the top and sides of the oven door may become hot enough to cause burns.

15 The Slide-In Gas Range has not been evaluated for use with any 3rd party aftermarket systems. Do not attempt to use this appliance with a wok ring or any other after-market device that may block air to the burner or otherwise cause a fire or carbon monoxide hazard.

COOKTOP SAFETY

⚠WARNING When using electrical and gas appliances, take safety precautions to reduce the risk of burns, electric shock, fire, injury to persons or property damage, including the following:

1 NEVER leave this appliance unattended while the top surface cooktop is in use.

2 Always keep a Class ABC or Class K fire extinguisher readily accessible and near the appliance. Familiarize yourself and other household members in advance with fire extinguisher operation.

3 If the knob is rotated quickly from **Lite** position to beyond **Hi** without ignition, gas will continue to flow, resulting in risk of carbon monoxide poisoning, fire and explosion hazards. If ignition does not occur and flame is not present, turn the knob back to the **Off** position. See page 16 for Cooktop Controls.

4 If a burner is not ignited, ensure the knob is in the **Off** position. When a control knob is in use to ignite or control a burner, a LED illuminates behind the knob. In the event of a power outage, the LED does not function. If a burner does not ignite, return the knob to the **Off** position.

5 In the event that clothing or hair catches fire, stop, drop and roll immediately to extinguish flames.

6 DO NOT USE WATER ON GREASE FIRES. Smother flame with a close-fitting lid or metal tray or use a dry chemical or foam-type extinguisher if you are trained in its usage. Never attempt to move a flaming pan. Flaming grease outside of cookware can be extinguished by covering it with baking soda or by a multi-purpose dry chemical or foam-type fire extinguisher.

7 Only certain types of glass, glass-ceramic, ceramic, earthenware or other glazed utensils are suitable for range-top service without breaking due to sudden change in temperature. Follow manufacturer's recommendations.

8 Flames extending beyond the edge of cookware are a burn hazard. Set burner controls so flames do not extend beyond the edge of cookware.

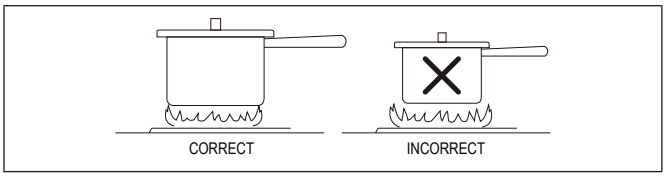

9 To reduce risk of burns, ignition of flammable materials and spillage due to unintentional contact with a utensil, position utensil handles turned inward so they do not extend over adjacent cooktop burners or workspaces.

10 DO NOT TOUCH COOKTOP BURNERS, GRATES OR AREAS NEAR BURNERS. The cooktop, grates and surfaces facing the cooktop may be hot enough to cause burns even if no flames are present. During and after use, do not touch or allow clothing or other flammable materials to contact cooktop areas until sufficiently cooled.

11 Use proper pan size. The Slide-In Gas Range is equipped with cooktop burners of different sizes. Select utensils having flat bottoms large enough to cover the entire burner and flame. The use of undersized utensils will expose a portion of the flame to direct contact and may result in ignition of clothing. Proper relationship of utensil to burner will also improve efficiency.

12 Carefully monitor foods being fried at high or medium-high heat settings. Use extreme caution when moving a grease kettle or disposing of hot grease after deep-fat frying.

13 Food for frying should be as dry as possible. Frost on frozen foods or moisture on fresh foods can cause hot fat to bubble up and over the sides of the pan.

14 Use little fat for effective shallow or deep fat frying. Overfilling a pan with fat can cause spillovers when food is added.

15 Always heat fat slowly and monitor as it heats. If a combination of oils or fats will be used in frying, stir them slowly before heating or as fats melt.

16 Use a deep fat thermometer whenever possible to prevent heating fat beyond the smoking point.

17 Always turn on the hood when cooking at high heat or when flambéing food.

18 Never attempt to move cooking utensils containing hot oil or grease, as it can cause severe burns. Allow oil or grease to cool before moving or disposing.

19 Do not attempt to lift the cooktop, as it may damage the gas tubing to the surface burners and cause a gas leak and risk of fire.

20 To reduce risk of burns and maximize cooking efficiency, use the correct burner for the pan size and center it on the burner. Always ensure cookware is centered properly on the burner. Do not use small pans with large burners.

CORRECT PLACEMENT	INCORRECT PLACEMENT
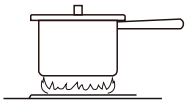 small pan on small burner	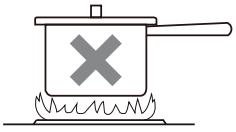 small pan on large burner
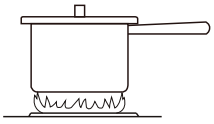 large pan on large burner	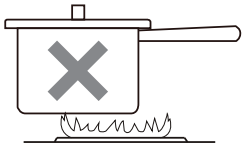 pan off-center on burner
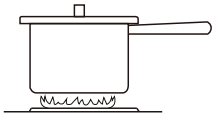 large pan on small burner	

IMPORTANT SAFETY INSTRUCTIONS

OVEN SAFETY

1 If materials inside the oven ignite, keep the door closed, turn off any oven operation and disconnect power at the fuse or breaker box. Wait for the fire to extinguish and allow the oven to cool before removing contents, cleaning the oven and restoring power.

2 Never place anything, such as aluminum foil, spill mat, baking stone, cookware, etc., on the bottom of the oven cavity, as these items can trap heat or melt and may cause damage to the appliance and risk of electric shock, smoke or fire.

3 Do not heat unopened food containers, as build-up of pressure may cause the container to burst and cause injury.

4 Do not use a broiler pan without its insert. Do not cover the broiler pan insert with aluminum foil, as exposed fat and grease could ignite.

5 Do not obstruct oven vents or any other slots or openings on the unit.

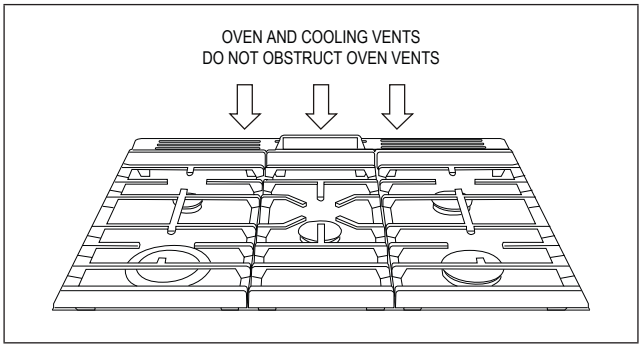

6 DO NOT TOUCH OVEN BURNERS OR INTERIOR SURFACES. Oven burners and surfaces may be hot even though no flames are present. Interior surfaces of an oven become hot enough to cause burns. During and after use, do not touch or allow clothing or other flammable materials to contact oven burners or interior surfaces until sufficiently cooled. Other surfaces, such as vent openings, surfaces near vent openings, the oven door and the door window, also may become hot enough to cause burns.

7 During oven operation, upper interior surfaces of the storage drawer may become very hot. Do not touch interior surfaces of the storage drawer until the oven has sufficiently cooled. Do not store flammable materials or temperature sensitive items in the storage drawer at any time.

SELF CLEAN HAZARDS

1 Before starting Self Clean, ensure the oven is empty. Remove broiler pan, racks, cookware and any other materials.

2 Before starting Self Clean, to avoid ignition, remove excess grease or food from inside the oven.

3 The door locks several minutes after the start of Self Clean. If the door is opened before it locks, Self Clean is canceled. If the door does not lock within 15 minutes, cancel Self Clean and contact an authorized servicer for repair.

4 During Self Clean, do not use the rangetop. It is not safe to operate any part of the appliance during a Self Clean cycle.

5 If the appliance malfunctions in Self Clean, keep door closed, turn off appliance, disconnect power at the fuse or breaker box and contact an authorized servicer for repair.

6 If materials inside the oven ignite, turn off appliance, disconnect power at the fuse or breaker box and wait for the fire to extinguish. Do not force the door open. Wait for the oven to cool before manually cleaning oven.

7 Some birds are extremely sensitive to the fumes produced during a Self Clean cycle. Move caged pet birds outside or to another well-ventilated room until process is complete and the home is completely aired out.

ABOUT FOOD SAFETY

Cook foods to safe temperatures recommended by the United States Department of Agriculture (USDA). To check internal temperature of foods to determine doneness, insert a temperature probe in a thick or dense area away from fat or bone.

USDA RECOMMENDED TEMPERATURE

FOOD	MINIMUM INTERNAL TEMPERATURE
beef, pork, veal and lamb steaks, chops and roasts	145 °F and allow to rest for at least 3 minutes
ground meats	160 °F
ground poultry	165 °F
ham, fresh or smoked (uncooked)	145 °F and allow to rest for at least 3 minutes
ham (fully cooked, to reheat)	165 °F
poultry breasts, whole bird, legs, thighs, wings, giblets and stuffing	165 °F
eggs	160 °F
fish and shellfish	145 °F
leftovers	165 °F
casseroles	165 °F

NOTE:

- ALWAYS use potholders to prevent burns when handling utensils in contact with hot food. Heat from the food can transfer through utensils to cause skin burns.
- Avoid steam burns by directing steam away from the face and hands. Slowly lift the farthest edge of a dish covering and carefully open cooking bags and popcorn bags away from the face.
- Stay near the appliance when it is in use and check progress frequently to avoid overcooking food.
- NEVER use the appliance for storing cookbooks or other items.
- Select, store and handle food carefully to preserve its high quality and minimize the spread of foodborne bacteria.

READ AND SAVE THESE INSTRUCTIONS FOR FUTURE REFERENCE

PARTS AND FEATURES

TOP VIEW

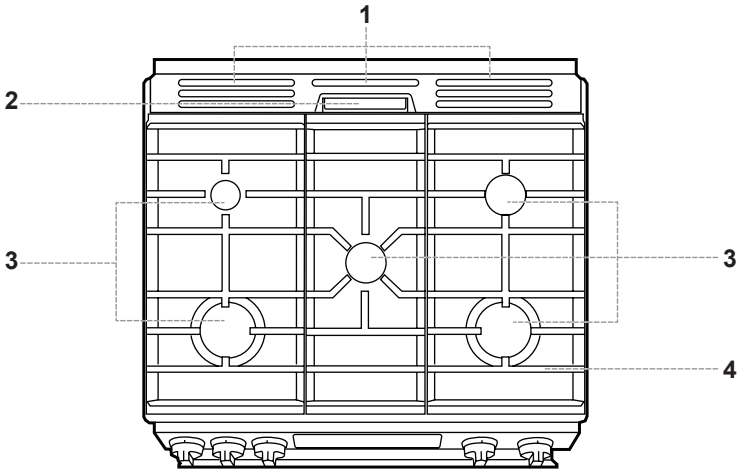

FRONT VIEW

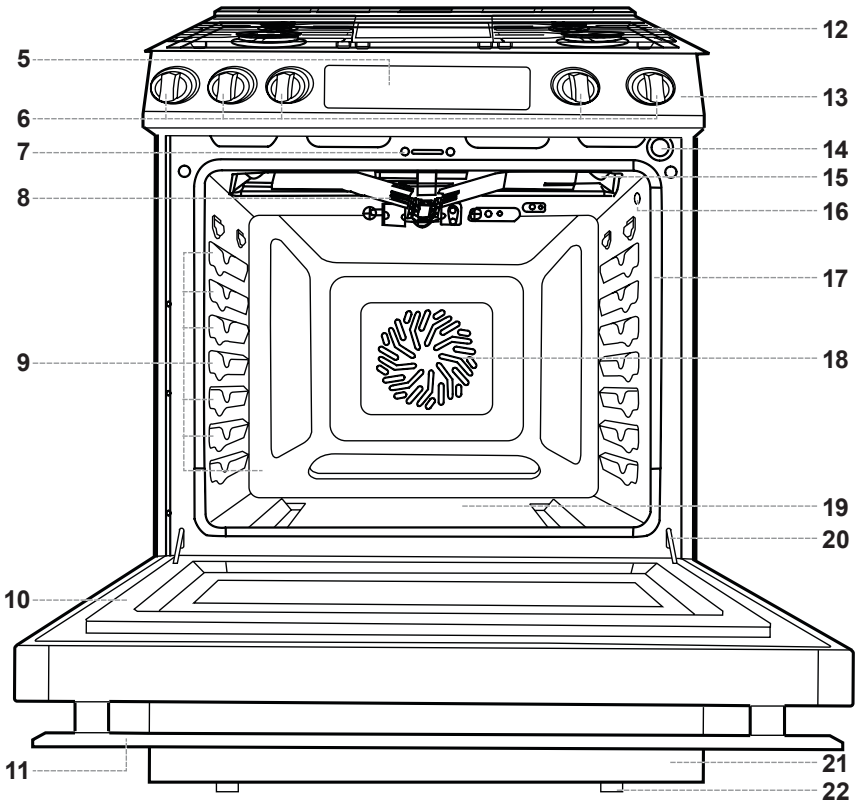

1 Cooling Vents
2 Oven Vent
3 Cooktop Burners
4 Cast Iron Grates
5 Control Keypad and Display
6 Cooktop Control Knobs
7 Door Lock
8 Broil Burner
9 Rack Positions
10 Door
11 Door Handle
12 Cooktop
13 Control Panel
14 Door Switch
15 Oven Lights
16 Probe Jack
17 Door Gasket
18 Convection Fan
19 Oven Bottom
20 Door Hinge
21 Storage Drawer
22 Leveling Legs

INCLUDED ACCESSORIES

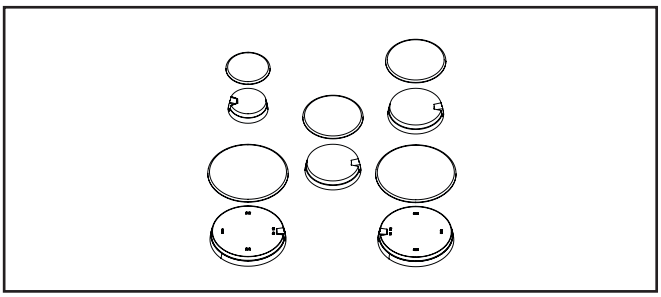

Surface Burners and Caps (5)

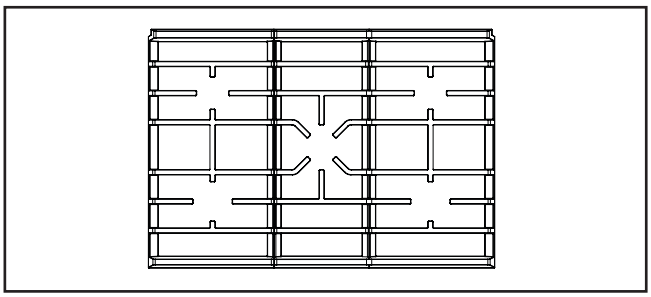

Surface Burner Grates (3)

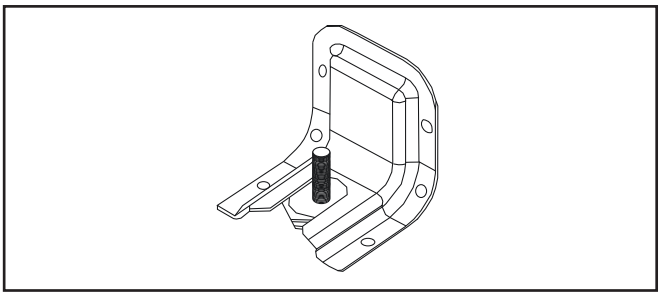

Anti-Tip Bracket (1 bracket, 2 screws, 1 template)

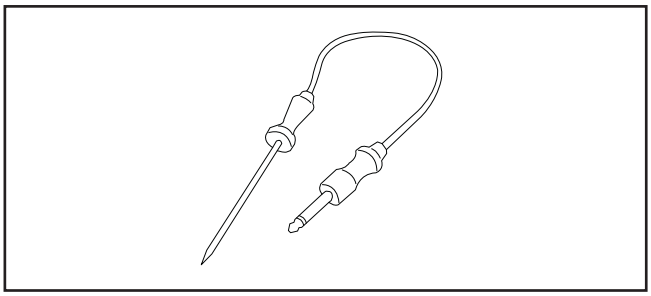

Oven Probe (1)

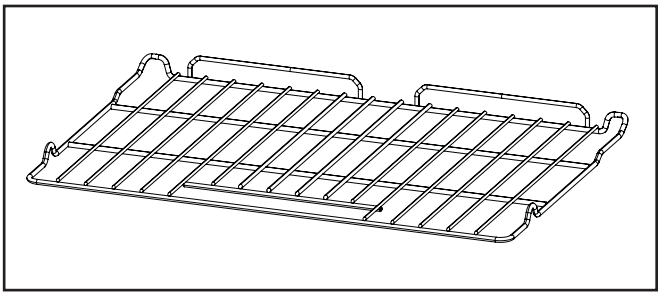

Flat Rack (2 Racks)

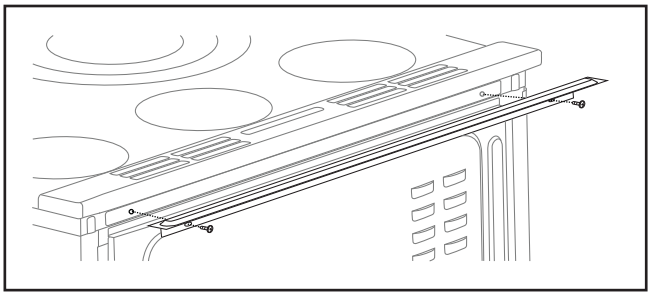

Optional Rear Trim Kit (1 trim, 2 screws)

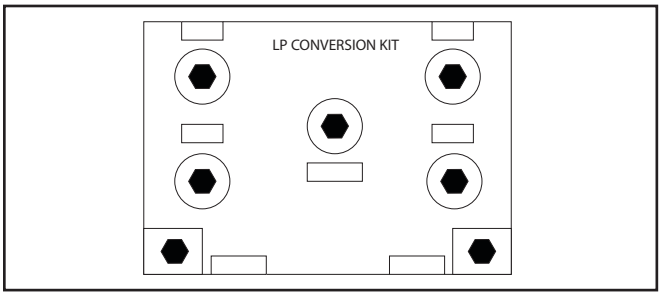

LP Conversion Kit (1)

PARTS AND FEATURES

COOKTOP

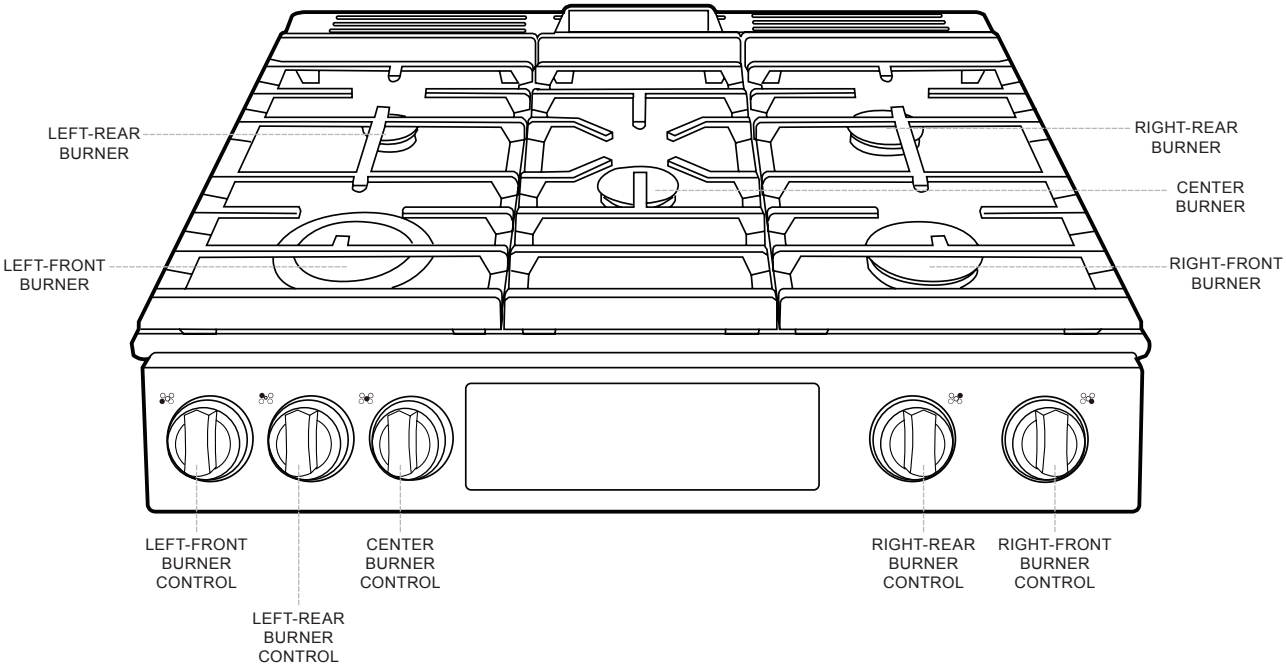

CONTROL KEYPAD AND DISPLAY

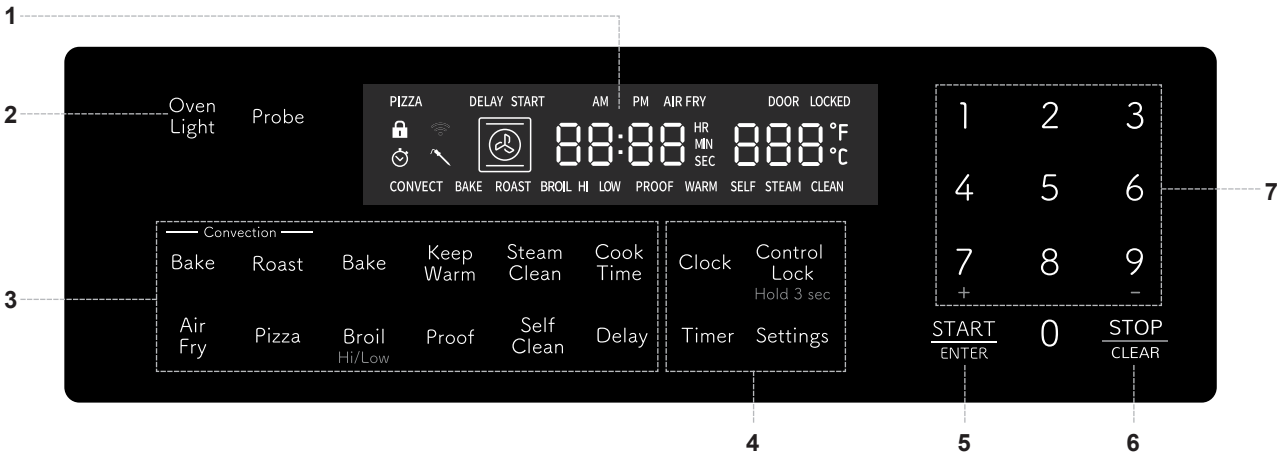

1 **Display**: communicates information, including time-of-day, oven temperature and cooking mode

2 **Oven Light pad**: controls interior oven light

3 **Oven Operations**: available operating modes

4 **Auxiliary Features**: useful features not associated with oven operation, such as Timer, Control Lock and Settings

5 **START/ENTER pad**: initiates the selected oven operation or selects an available option

6 **STOP/CLEAR pad**: immediately halts any oven operation

7 **Numeric Input pads**: used to enter desired oven temperature, set the clock, change settings or input other information

SETTINGS

Navigate through the Settings menu to customize the appliance. Settings can only be adjusted when no other oven operation is in progress.

TO SCROLL THROUGH SETTINGS

1 Touch **Settings** pad on the control panel. The first menu option *VoL* appears in flashing letters and the current setting appears in solid letters.

2 Use the **7+** pad to scroll through the menu. Use the **9-** pad to scroll backwards through the menu.

3 Touch **START/ENTER** pad to select a menu item.

4 Touch **7+** and **9-** pads to toggle through the setting options.

5 Touch **START/ENTER** pad to accept changes. Touch **Settings** pad or **STOP/CLEAR** pad to reject changes.

6 Touch **STOP/CLEAR** pad to exit Settings menu.

SETTINGS MENU

SETTING	DISPLAY	OPTIONS	DESCRIPTION
Volume	*VoL*	1 or 2	The audible feedback of the control panel is programmed by default at maximum volume. Use this setting option to reduce the volume.
Display Brightness	*dISP*	1, 2 or 3	The display is programmed by default at maximum brightness. Use this setting option to reduce the brightness of the display.
Hold after Cook	*hold*	OFF or ON	When a timed bake function completes, the oven will turn off or, if the Hold setting is turned on, the oven will maintain a warm temperature to keep the cooked food warm.
Sabbath Mode	*SAbE*	OFF or ON	Use this setting to program the appliance into an operating mode compliant with the standards required for use during Sabbath.
Degree Units	*dEG*	F or C	The oven is programmed by default to use degrees Fahrenheit, but it can be changed to operate in degrees Celsius.
Oven Calibration	*CAL*	+ or - 25 °	If the oven temperature is higher or lower than expected based on outcomes of familiar recipes, use this setting to offset the oven's target temperature. Calibration can be offset between -25 °F and +25 °F. Default calibration offset is zero.
Sales (Demo) Mode	*SALE*	OFF or ON	In Sales mode, or Demo mode, controls function as normal, but no cooking mode is initiated, and heat is not produced. This setting is intended for use by retailers. By default, Sales mode is off.

CONTROL LOCK

The Control Lock function disables all pads on the control panel to prevent accidental operation of the oven, such as by pets, children or while cleaning. The **STOP/CLEAR** pad is never disabled. Control Lock can be used after the start of a baking mode.

TO USE CONTROL LOCK

1 Touch and hold **Control Lock** pad for three seconds to activate Control Lock.

2 Touch and hold **Control Lock** pad for three seconds to deactivate Control Lock.

TIMER

This appliance includes a built-in kitchen timer.

TO SET THE TIMER

1 Touch **Timer** pad. *00:00* appears on the display.

2 Enter time in hours and minutes (hh:mm) and touch **START/ENTER** pad. The clock begins to count down.

3 When the set time has passed and the clock reaches *00:00*, an audible alert sounds to signal the time is complete.

4 Touch **Timer** pad to clear the signal or exit Timer early.

OVEN LIGHT

Touch **Oven Light** pad to turn the oven light on or off. See page 26 for bulb replacement instructions.

SABBATH MODE

When in Sabbath mode, the oven operation may be controlled as described below, however audible signals will not sound, the clock is disabled, oven lights are disabled and changes to the display may be delayed from 30 to 60 seconds. There is no need to remove oven light bulbs during Sabbath mode. The oven will be allowed to operate indefinitely until Sabbath mode is exited, overriding the factory 12-hour default maximum continuous oven operation.

TO SET SABBATH MODE

1 Touch **Settings** pad.

2 Use the **7+** pad to scroll through the menu until *SAbE* appears on the display.

3 Touch **START/ENTER** pad to select the Sabbath mode.

4 By default, this setting is OFF. Touch **7+** and **9-** pads to toggle between ON and OFF.

5 Touch **START/ENTER** pad to turn on Sabbath mode. A single] bracket appears on the display, indicating Sabbath mode is active.

During Sabbath mode, the function of touchpads on the control panel are modified as shown below.

FUNCTION DURING SABBATH MODE		
1	2	3
Bake 200 ˚F	Bake 250 ˚F	Bake 300 ˚F
4	5	6
Bake 350 ˚F	Bake 400 ˚F	90 minutes
7	8	9
2 hours	3 hours	4 hours
	0	
	5 hours	

TO CONTROL OVEN IN SABBATH MODE

1 For continuous baking operation, touch the pad corresponding to the desired oven temperature. Touch **START/ENTER** pad.

2 For timed baking operation, touch the pad corresponding to the desired oven temperature, then touch the pad corresponding to the operating time. Touch **START/ENTER** pad.

3 After **START/ENTER** pad is touched, a random delay between 30 and 60 seconds elapses and a second bracket] [appears in the display, indicating the oven is baking.

4 Temperature can be adjusted at any time. To adjust the oven temperature, touch the pad corresponding to the desired oven temperature then touch **START/ENTER** pad.

5 Touch **STOP/CLEAR** pad to cancel any baking operation in progress. A random delay between 30 and 60 seconds elapses, and a single bracket] appears in the display.

TO EXIT SABBATH MODE

1 Quickly touch **Settings** pad three times to reopen the Settings menu.

2 Use the **7+** pad to scroll through the menu until *SAbE* appears on the display.

3 Touch **START/ENTER** pad to select the Sabbath mode.

4 Touch **7+** pad to toggle between ON and OFF.

5 When *OFF* appears on the display, touch **START/ENTER** pad to turn off Sabbath mode.

HOLD TO KEEP WARM SETTING

The Hold to Keep Warm setting is designed to keep cooked foods hot. When this setting is activated, the oven will remain on at a lower temperature after cooking time has completed to keep food at a suitable temperature for eating. For best results, do not leave food in the oven for longer than 2 hours on Hold.

⚠WARNING FOODBORNE ILLNESS HAZARD

- Bacteria may grow in food at temperatures below 140 °F. This mode is designed to keep cooked foods warm, not heat cold foods.

TO SET HOLD TO KEEP WARM MODE

1 Touch **Settings** pad.

2 Use the **7+** pad to scroll through the menu until *hold* appears on the display.

3 Touch **START/ENTER** pad to select the Hold setting.

4 By default, this setting is OFF. Touch **7+** and **9-** pads to toggle between ON and OFF.

5 Touch **START/ENTER** pad to accept changes. Touch **STOP/CLEAR** pad to exit Settings menu.

BEFORE FIRST USE

1 Remove all packaging, literature, removable labels and protective plastic from the appliance. Check inside the oven, inside the drawer and around the door and trim edges carefully.

2 Ensure the appliance is properly installed and connected to power according to all instructions in the included Installation Manual.

3 Wipe all surfaces, including inside oven and drawer, with a damp, soft cloth to remove any dust that may have settled during shipping and storage.

4 Read and understand this manual and familiarize yourself with the controls and features described.

5 Confirm cooktop burners and oven operate as intended. Contact Sharp customer support immediately if the appliance does not work as expected.

6 Ventilate the kitchen, then touch **Bake** pad, adjust the temperature to 450 °F and touch **START/ENTER** pad. Allow the oven to heat for 1 hour to remove any dust or impurities in the cavity. During this initial operation, an odor is normal.

SET THE CLOCK

1 Touch **Clock** pad on the control panel.

2 Enter the time of day using the numeric keypad and touch **Clock** pad to toggle between AM and PM.

3 Touch **START/ENTER** pad to accept the displayed time. Touch **STOP/CLEAR** pad to reset.

CONDITION OF THE UNIT

Check the appliance for any damage. If there is any damage, do not operate the appliance and contact your dealer or a Sharp Authorized Servicer. Return the appliance to the nearest authorized service facility for examination, repair or adjustment. Call 1-800-BE-SHARP for support.

SERVICE AND REPAIR WARNING

Do not repair or replace any part of the Sharp Slide-In Gas Range. If the display, heaters or touch controls fail, consult a Sharp Authorized Servicer.

PRODUCT DISPOSAL

This product may not be treated as household waste. To dispose of the appliance, deliver it to an applicable collection point for the recycling of electrical and electronic equipment. Dispose of this product correctly to prevent negative consequences for the environment and human health, which could otherwise be caused by inappropriate waste handling of this product. For more detailed information about recycling of this product, please contact your local city office, your household waste disposal service or the shop where you purchased the product.

COOKTOP USE

⚠WARNING FIRE, EXPLOSION HAZARD

- NEVER OPERATE THE COOKTOP UNATTENDED. Failure to follow this warning could result in fire, explosion or burn hazard that could cause property damage, personal injury or death.
- If a fire should occur, keep away from the appliance and immediately call your fire department.
- DO NOT ATTEMPT TO PUT OUT GREASE FIRES WITH WATER. Smother flames with a close-fitting lid or metal tray. Never pick up a flaming pan.
- Overboiling causes smoking and greasy spills that may ignite. Always turn off all controls when finished with cooking.
- Do not place items that can melt or burn on the cooktop, even when it is not in use.
- Do not wear loose-fitting or hanging garments while using the cooktop. Tie long hair back while using the cooktop.

⚠WARNING CARBON MONOXIDE HAZARD

- Do not line or cover grates or any other part of the cooktop with aluminum foil, as this may cause risk of carbon monoxide poisoning, overheating of cooktop surfaces and fire.
- Burners and burner caps must be positioned and aligned correctly for proper combustion. See page 25.
- To avoid risk of carbon monoxide poisoning, fire and explosion hazards, turn the knob to the **Off** position when the burner is not in use or flame is not present.

⚠ CAUTION BURN AND ELECTRIC SHOCK HAZARD

- Use cookware of proper size for the burner in use and adjust burners so flames do not extend beyond the edge of cookware.
- To avoid burns, do not touch cooktop or grates after cooktop use until completely cool.
- To avoid steam burns, do not use a wet sponge or cloth to clean cooktop while it is still hot. Do not use wet potholders, as the steam can cause burns.
- Do not allow cookware to boil dry or otherwise overheat.
- Never cook directly on the grates. Do not cook items packaged in aluminum foil directly on the cooktop or grates. Do not use aluminum foil or any material that could melt directly on the cooktop. Always use appropriate cookware.

COOKTOP BURNER BTU RATING

BURNER	BTU/HOUR (NATURAL GAS)	BTU/HOUR (LP)
left front	15,000	12,000
left rear	5,000	5,500
right front	15,000	12,000
right rear	9,500	8,500
center	9,500	8,500
cooktop	**54,000**	**46,500**

COOKTOP BURNER CONTROL

TO TURN ON COOKTOP BURNER

1. Push in the corresponding control knob and rotate left (counterclockwise) to the **Lite** position. Gas flows and igniters on all burners spark.
2. After the burner ignites, adjust to the desired heat setting by aligning the power level on the knob to the indicator mark on the control panel.
3. To turn off a burner, simply rotate the control knob right (clockwise) to the **Off** position.

NOTES:

- A small icon above the control knob indicates which burner is controlled by that knob.
- It is recommended to watch the flame rather than the knob when adjusting burner setting.

OFF

LITE, ALLOWS IGNITERS TO SPARK

HI, FOR HIGH HEAT LEVEL

MED, FOR MEDIUM HEAT LEVEL

LOW, FOR LOW HEAT LEVEL

IN THE EVENT OF POWER FAILURE

In the event of power failure, electronic ignition does not function. However, cooktop burners can be lit manually.

⚠ WARNING **BURN HAZARD**

- Use extreme caution when lighting cooktop burners during power outage. Use fireplace matchsticks or a grill lighter with an extended wand to keep hands away from flames.

TO MANUALLY IGNITE COOKTOP BURNER

1. With the control knob turned to the **Off** position, light a match or lighter and hold the flame near ports beneath the burner cap. The ports are openings around the perimeter of the burner top.
2. Rotate the knob to the **Lite** position. The burner flame will ignite.
3. Once the burner is lit, remove the match or lighter and adjust the knob to the desired heat setting. The burner will function as normal until turned off.

⚠ WARNING **FIRE, EXPLOSION HAZARD**

- If the knob is rotated quickly from Lite position to beyond Hi without ignition, gas will continue to flow, resulting in risk of fire and/or explosion hazards. If ignition does not occur and flame is not present, turn the knob back to the **Off** position.
- If a burner is not ignited, ensure the knob is in the **Off** position. When a control knob is in use to ignite or control a burner, a LED illuminates behind the knob. In the event of a power outage, the LED does not function. If a burner does not ignite, return the knob to the **Off** position.

OVEN USE

⚠ WARNING FIRE, CARBON MONOXIDE HAZARD

- If materials inside the oven ignite, keep the door closed, turn off the appliance and disconnect the power at the circuit breaker. Wait for the oven to cool before removing contents, then clean the oven and restore power.
- Never place anything (aluminum foil, spill mat, baking stone, cookware, etc.) on the bottom of the oven cavity. Items on the bottom of the oven cavity can trap heat or melt, resulting in damage to the appliance and risk of electric shock, smoke or fire.
- Never cover any slots, holes or passages in the oven bottom and never cover a rack with materials such as aluminum foil, as it blocks airflow and results in risk of carbon monoxide poisoning.
- Do not operate oven without cooktop grates in place, as the grates direct vented air away from walls and cabinets.

⚠ CAUTION BURN HAZARD

- Always use dry potholders or oven mitts when using the oven. Moist or damp potholders in contact with hot surfaces may cause steam and risk of burns.
- Do not block or cover oven vents, located along the rear of the cooktop. When the oven is in use, this area may get very hot.
- Racks are designed to stop before coming completely out of the oven to reduce the risk of dropped or spilled foods.

ABOUT OVEN COOKING

1. Preheating the oven is necessary for most oven cooking. Unless the recipe specifically instructs otherwise, place food in the oven only after preheating is complete.
2. It is normal for steam or moisture to emit from the oven vent. Moisture evaporates from food during any cooking process. The moisture content of the food determines the amount of steam or vapor emitted. The moisture may condense on any surface cooler than the oven interior, such as door trim and the control panel.
3. During operation, do not leave the oven door open longer than necessary. If the door is left open too long during operation, baking mode will automatically cancel.
4. During operation, the convection fan will automatically stop when the oven door is opened.
5. All baking modes have a time limit of twelve hours. Broil mode has a time limit of one hour. To continue cooking past time limits, simply reset the oven.
6. Place a baking tray on a lower rack to catch drips and spills during cooking.
7. If operating at altitudes greater than 3,000 feet, recipes may require adjustment. Consult USDA or other trusted sources for recommendations on high-altitude baking.

OVEN HEAT SOURCE BTU RATING (NATURAL GAS)

HEATING ELEMENT	BTU/HOUR (NATURAL GAS)	BTU/HOUR (LP)
broil burner (top)	16,000	12,500
bake burner (bottom)	18,500	14,000
oven	**34,500**	**26,500**

OVEN RACKS

The SSG3061JS and SSG3062DNS models of the Sharp Slide-In Gas Range come with two wire flat racks, which can be placed in any of the seven rack positions in the oven.

FLAT RACK

The flat racks are versatile and low profile and slide in and out of the oven on rack guides. Multiple racks can be used simultaneously.

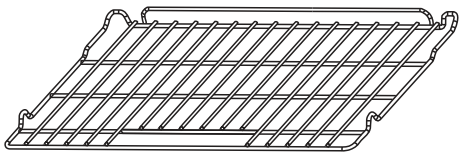

INSERT/REMOVE RACKS

TO INSERT RACK

NOTE: The rack can be installed in only one direction.

1. Orient the rack so the handle is toward the front and the interlock features are on the top.
2. Tip the rack so the front is several inches higher than the back.
3. Slip the interlock features under the stop position on the rack guides.
4. Lower the rack front while pushing back until completely inserted.

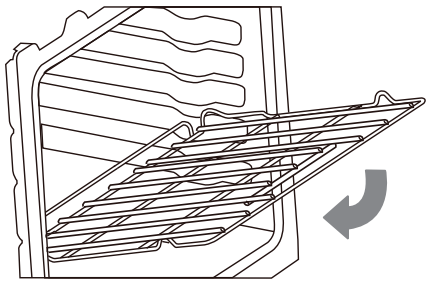

TO REMOVE RACK

1 Remove all food and utensils from rack.
2 Firmly grasp rack from both sides.
3 Pull rack out until it reaches the stop position.
4 Lift up on the front of the rack and pull outward.

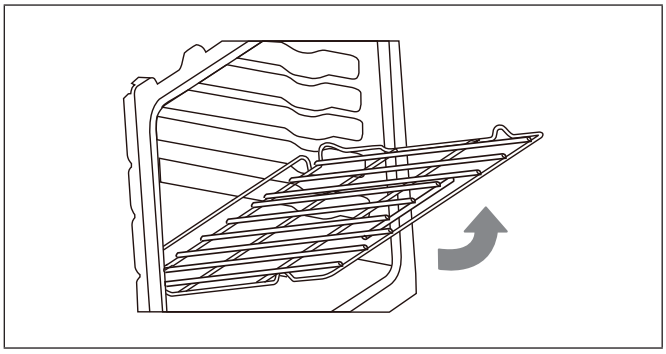

RACK POSITIONS

For best performance, adjust racks so food is positioned at the center of the oven. For most foods, the best rack position is the center position, the fourth from the bottom. For larger foods, such as roasts or turkeys, use a lower position. When broiling, food should be close to the broil burner in one of the top two rack positions. When using multiple racks simultaneously, space out the food out around the oven center.

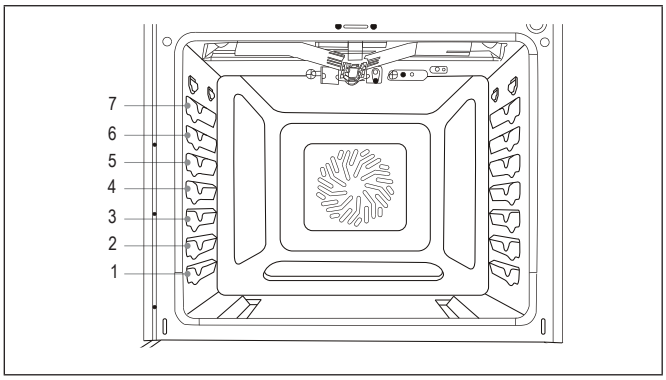

COMPONENT COOLING FAN

The cooling fan activates during any cooking mode to cool inner components and outer door surfaces. This air is exhausted through the vent located above the oven door. It continues to run until components have cooled sufficiently. The cooling fan operates at double speed (or RPM's) whenever the inner components' temperature becomes too high.

OVEN DOOR

To avoid oven door glass breakage:

- Always ensure racks are fully inserted and no bakeware extends past the front edge of an oven rack before closing the oven door.
- Do not set objects on the glass surface of the oven door.

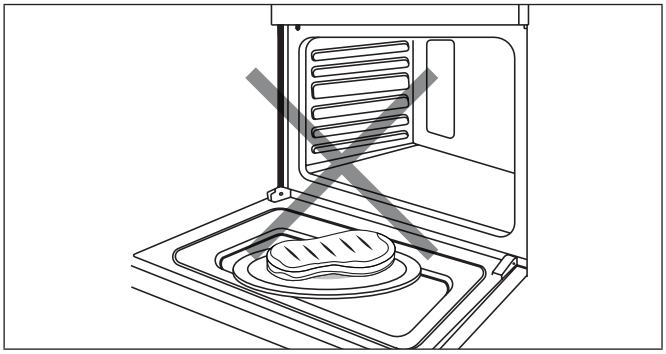

- Do not hit glass surfaces with bakeware or other objects.
- Do not wipe down glass surfaces until the oven has completely cooled.

OVEN VENTS

Blocking or covering the oven vents will cause poor air circulation, affecting cooking, cleaning and cooling results.

- Both the upper and lower oven vents allow fresh air to enter the cooling system.
- The lower oven vent also allows hot air to be expelled from the cooling system.

OVEN CONDENSATION AND TEMPERATURE

- It is normal for a certain amount of moisture to evaporate from food during any cooking process. The amount of condensation depends on the moisture content of the food.
- The moisture may condense on any surface cooler than the inside of the oven, such as the control panel.
- The Slide-In Gas Range has an electronic temperature sensor to help maintain an accurate temperature. Your previous oven may have had a mechanical thermostat that drifted gradually to a higher temperature. You may need to adjust your favorite recipes when cooking in a new oven.

OVEN USE

COOKING WITH CONVECTION

In a conventional oven, the heat sources cycle on and off to maintain an average temperature in the oven cavity. As the temperature gradually rises and falls, gentle air currents are produced within the oven. This natural convection tends to be inefficient because the currents are irregular and slow.

CONVENTIONAL CONVECTION

Bake Element and Broil Element

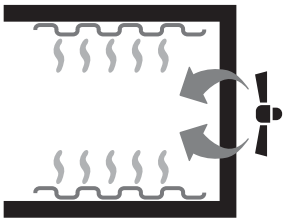

ADVANTAGES OF CONVECTION COOKING

- Baking on multiple racks saves time and provides even cooking results in food
- Prepares whole meals at once with no flavor transfer
- Requires no specialized bakeware
- Dehydrates herbs, fruits and vegetables
- Saves time and energy
- Convection broiling allows for extraordinary grilling with thicker cuts of food

OVEN OPERATION SYMBOLS

FUNCTION	ICON	DEFAULT TEMP.
Bake		350 °F
Broil Hi		590 °F
Broil Low		550 °F
Pizza		400 °F
Air Fry		400 °F
Convection Bake		350 °F
Convection Roast		350 °F
Warm		150 °F
Proof		No default temperature
Steam Clean		No default temperature
Self Clean		790 °F

PREHEAT

For most oven cooking, preheating the oven is recommended and desirable. Some foods, such as large pieces of meat where the total cooking time is much longer than preheating time, do not technically require preheating time.

In all oven modes that require preheating, the oven will automatically enter preheat mode after **START/ENTER** is touched. The temperature display will show the current oven temperature as it increases until the set temperature is reached. Once the set temperature is reached, an alert will sound indicating preheating is complete.

BAKE

The Bake mode applies heat from both above and below the food to achieve exceptional baking performance. The Bake mode works best with small to medium sized foods requiring only one rack positioned at the center of the oven, such as casseroles, frozen dinners, single-layer cakes and individual racks of cookies.

TO BAKE

1. Touch **Bake** pad.
2. The default temperature for Bake mode is 350 °F. Use the numeric keypad to adjust to the desired oven temperature.
3. Touch **START/ENTER** pad.
4. Allow the oven to preheat before placing food in oven.
5. When cooking is complete, touch **STOP/CLEAR** pad to exit Bake mode.

BROIL HI/LOW

The Broil mode is designed to provide similar results to grilling by exposing food to direct radiant heat from the broil burner at the top of the oven. Broil can be used to cook steaks or other foods where a seared exterior is preferred or in short durations to brown casserole tops or melt cheese. Broil works best with food in rack positions near the top of the oven. The Broil mode will not operate if the oven door is open. If the door is left open, an alert will sound to close the door, and if the door is not closed, Broil mode will cancel automatically.

NOTES:

- The broil burner is very powerful. Monitor food closely to avoid burning food.
- When broiling meat, it is recommended to use a broiling pan to allow grease and juices to drain from the meat.

TO BROIL

1. Touch **Broil** pad.
2. The default setting is Hi Broil. To select Low Broil, touch **Broil** pad again.
3. Touch **START/ENTER** pad. Allow the oven to operate 5–10 minutes before placing food in the oven. No preheat alert will sound.
4. When broiling is complete, touch **STOP/CLEAR** pad to exit Broil mode.

PIZZA

The Pizza mode uses a customized heating algorithm to bake fresh pizza. Fresh pizza can be homemade or purchased from a store or specialty shop.

TO BAKE PIZZA

1. Place oven rack in the middle position (position 4). Touch **Pizza** pad.
2. The default temperature for Pizza mode is 400 °F. Use the numeric keypad to adjust to the desired oven temperature.
3. Touch **START/ENTER** pad.
4. Allow the oven to preheat before placing food in oven.
5. When cooking is complete, touch **STOP/CLEAR** pad to exit Pizza mode.

AIR-FRY

The Air Fry mode uses convection fans to cook foods with moist, soft interiors and perfectly crisped exteriors without using cooking oil.

1. Place an oven rack one position above center, then touch **Air Fry** pad.
2. The default temperature for Air Fry mode is 400 °F. Use the numeric keypad to adjust to the desired temperature.
3. Touch **START/ENTER** pad.
4. Allow the oven to preheat before placing food in oven.
5. Place food for air-frying on a flat, non-stick baking tray and heat according to the chart below or recipe.
6. When air-frying is complete, touch **STOP/CLEAR** pad to exit Air Fry mode.

AIR-FRY FOODS	TEMPERATURE	COOK TIME (MINUTES)
frozen fries	475 °F	18
fresh fries	475 °F	22
frozen wings	450 °F	40
fresh wings	450 °F	30
frozen mozzarella sticks	475 °F	6
frozen chicken nuggets	440 °F	13
brussels sprouts	440 °F	15
chicken tenders	400 °F	30

NOTE: For more even and crispy results, flip foods halfway through cooking time.

CONVECTION BAKE

The Convection Bake mode uses a fan inside the oven to circulate hot air, providing even distribution of heat for more efficient baking. This mode is perfect for baking recipes that require the use of multiple racks.

NOTE: Multiple rack heating works best with the racks arranged evenly around the center of the oven.

TO CONVECTION BAKE

1 Touch **Convection Bake** pad.

2 The default temperature for Convection Bake mode is 350 °F. Use the numeric keypad to adjust to the desired oven temperature.

3 Touch **START/ENTER** pad.

4 Allow the oven to preheat before placing food in oven.

5 When cooking is complete, touch **STOP/CLEAR** pad to exit Convection Bake mode.

CONVECTION ROAST

The Convection Roast mode is designed for roasting large pieces of meat and uses a fan inside the oven to circulate hot air. This provides an even distribution of heat for more efficient heating and is better for browning roasts and creating crispier skin on poultry.

TO CONVECTION ROAST

1 Touch **Convection Roast** pad.

2 The default temperature for Convection Roast mode is 350 °F. Use the numeric keypad to adjust to the desired oven temperature.

3 Touch **START/ENTER** pad and allow the oven to preheat before placing food in oven.

4 When cooking is complete, touch **STOP/CLEAR** pad to exit Convection Roast mode.

KEEP WARM

The Keep Warm mode is designed to keep cooked foods hot by maintaining a maximum temperature of 150 °F. For best results, do not use Keep Warm mode for more than 2 hours.

⚠WARNING FOODBORNE ILLNESS HAZARD

- Bacteria may grow in food at temperatures below 140 °F. Do not attempt to cook food using Keep Warm mode. This mode is designed to keep cooked foods warm, not heat cold foods.

TO KEEP WARM

1 Touch **Bake** pad twice.

2 Touch **START/ENTER** pad.

3 When warming is complete, touch **STOP/CLEAR** pad to exit Keep Warm mode.

PROOF

The Proof mode uses the oven lights to provide a gently warm environment for rising bread or dough. As high temperatures will kill yeast, Proof mode will not start if the oven is too warm from previous use.

TO PROOF

1 Touch **Proof** pad.

2 Touch **START/ENTER** pad. Preheat is not required. Place food in oven immediately.

3 When proofing is complete, touch **STOP/CLEAR** pad to exit Proof mode.

STEAM CLEAN

⚠ CAUTION BURN HAZARD

- Use caution to avoid contact with hot surfaces. Oven surfaces, especially the oven bottom, may be hot.
- Hot surfaces may create steam in a wet sponge or cloth. If steam occurs when wiping the oven, allow the oven to cool slightly before wiping.

Steam Clean mode is designed to gently warm oven surfaces to create steam and loosen grease and light soils.

TO STEAM CLEAN

1 Start with a cool oven and remove all items from inside, including oven racks. Wipe out any large spills or excess debris. Scrape off and remove any burnt-on debris with a stiff plastic utensil, such as a hard plastic spatula or plastic paint scraper. To soften tough stains, spray inside surfaces with water or wipe with a wet sponge before using Steam Clean mode.

2 Pour 1 cup (8 oz) water in the center bottom of the oven and close the door.

3 Touch **Steam Clean** pad. Touch **START/ENTER** pad. The door does not lock during a Steam Clean cycle. Do not open the door until the Steam Clean cycle is complete.

4 When the Steam Clean cycle is complete, soak up any water in the oven bottom and wipe down interior surfaces with a soft, nonabrasive sponge or cloth. Touch **STOP/CLEAR** pad to exit.

SELF CLEAN

⚠WARNING FIRE AND BURN HAZARDS

- Before starting a Self Clean cycle, ensure oven is empty. Remove broiler pan, racks, cookware and any other materials and remove excess grease or food from inside the oven to avoid risk of ignition.
- Self Clean mode uses very high oven temperatures capable of reducing stubborn oven spoils to ash that can be easily wiped out once the oven is cool. The door locks several minutes after the start of a Self Clean cycle. If the door is opened before it locks, the Self Clean cycle is canceled. If the door does not lock within 15 minutes, cancel Self Clean and contact an authorized servicer for repair.

NOTES:

- Due to the high temperatures, it is advisable to use Self Clean mode during cooler weather to avoid unnecessarily burdening the home air conditioning system.
- Self Clean can be set to run for 3, 4 or 5 hours. Shorter times use less energy, but longer times allow for more thorough cleaning.
- 3-, 4- and 5-hour cycles do not include cooling time. Allow an additional 60 to 90 minutes for the door to unlock.
- During Self Clean, do not use the rangetop. It is not safe to operate any part of the appliance during a Self Clean cycle.

TO SELF CLEAN

1. Start with a cool oven and remove all items from inside, including oven racks. Wipe out any large spills or excess debris.
2. Touch **Self Clean** pad. Use the numeric pad to select the number of hours of the Self Clean cycle.
3. Touch **START/ENTER** pad. The oven door is locked during a Self Clean cycle.
4. When the oven has unlocked and cooled completely, wipe out any ashy residue with a damp, nonabrasive sponge or cloth. Touch **STOP/CLEAR** pad to exit. If a Self Clean cycle is canceled prematurely, the oven remains locked until it has cooled sufficiently.

DELAY

⚠ CAUTION FOODBORNE ILLNESS HAZARD

- Foods that spoil easily, such as milk, eggs, fish, stuffing, poultry and pork, should not be allowed to sit for more than 1 hour before cooking. Spoilage may occur sooner if oven is warm.

The Delay function allows you to delay the start of a baking operation until a specified time.

NOTES:

- Once Delay has been set, it cannot be modified. To set a different Delay start time, oven operation must be canceled and restarted.
- Delay cannot be used with Pizza or Broil modes.
- Delay start time cannot be set more than 12 hours in advance.

TO DELAY OVEN OPERATION

1. Select oven baking mode according to previous directions.
2. Touch **Delay** pad. The clock will begin to flash, indicating the start time can be entered.
3. Use the numeric keypad to set the start time. Touch **Delay** pad to toggle between AM and PM.
4. Touch **START/ENTE**R pad. Place food in the oven.
5. Between time of entry and set Delay start time, the clock on the display will alternate between the time of day and set Delay start time. DELAY START will appear above the clock whenever the Delay function is set.
6. When the Delay start time is reached, an alert sounds to indicate the oven is starting.

COOK TIME

The Cook Time function is used to set oven operation for a specific duration, after which time oven operation will stop. The Cook Time function can be used in conjunction with the Delay function. To use Cook Time with Delay, set the delayed start time as described above first, then set Cook Time as described below.

TO SET COOK TIME

1. Select oven baking mode by touching the corresponding touchpad. Touch **START/ENTER** pad.
2. Touch **Cook Time** pad. The clock will display *00:00*, indicating the duration can be entered.
3. Use the numeric keypad to set the duration in hours and minutes (hh:mm).
4. Touch **START/ENTER** pad. The clock begins to count down.
5. When the clock reaches 00:00, the display flashes and an alert sounds to indicate the baking mode has ended. The oven will turn off or, if it is set to Hold after Cooking, will maintain a warm temperature to keep the cooked food warm. See page 13 for Control Settings.
6. Touch **STOP/CLEAR** pad to clear the signal or exit timed bake early.

PROBE

⚠ CAUTION FOODBORNE ILLNESS HAZARD

- Consuming undercooked food can result in foodborne illness. Use the Probe feature only in accordance with the following instructions to ensure all portions of the food reach minimum safe cooking temperatures. Consult reputable government sources (USDA, FDA or CDC) for recommended safe minimum cooking temperatures.

⚠WARNING BURN HAZARD

- If the oven has preheated, the probe and jack are hot and could cause burns. Use an oven mitt to open the jack and insert probe.

The oven probe supplied with the appliance can monitor the internal food temperature and turn off the oven when the food reaches a set temperature. Some foods, particularly small or thin items, are not suitable for cooking with the probe due to their size and shape.

NOTES:

- Use only the probe supplied with this oven. Do not use any accessories not specifically designed to work with this appliance.
- To avoid damage to the probe, meat should be completely defrosted prior to insertion.
- The Probe feature only works with Bake, Convection Bake and Convection Roast modes.

TO USE PROBE FEATURE

1 Place meat in an appropriate dish or pan and insert probe into meat. Position the probe so the tip is in the approximate center of the thickest part of the food, such as the thickest part of the breast in whole poultry. The probe should not touch bone, fat or gristle.

2 Place the meat in the oven, plug the probe into the jack and close the door.

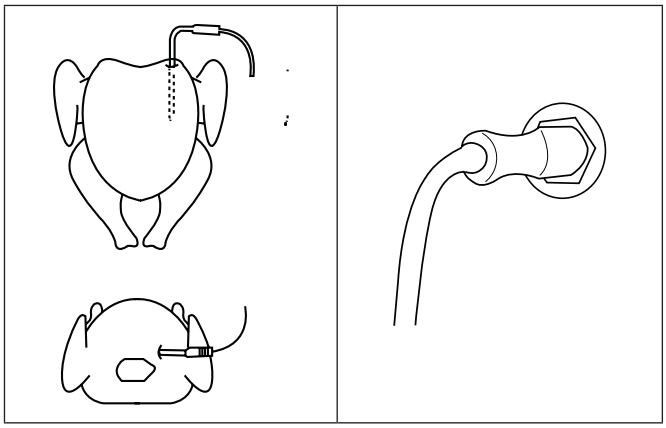

3 Select baking mode and oven temperature, then touch **START/ENTER** pad. The Probe icon on the display panel flashes, indicating the food temperature can be set.

4 Use the numeric keypad to set the desired food temperature, then touch **START/ENTER** pad. While Probe function is in operation, the display alternates between the oven temperature and the probe temperature reading.

5 When the probe temperature reading reaches the set temperature, the display flashes and an alert sounds to indicate the baking mode has ended. The oven will turn off or, if it is set to Hold after Cooking, will maintain a warm temperature to keep the cooked food warm. See page 13 for Control Settings.

6 Touch **STOP/CLEAR** pad to clear the signal or exit timed bake early.

⚠WARNING TIP-OVER HAZARD

- Always confirm the anti-tip device is engaged per instructions in Installation Manual before moving the appliance for cleaning, servicing or any other reason. Failure to follow these instructions results in a risk of injury or death to a child or adult if the range is tipped.

COOKTOP CLEANING

⚠ CAUTION BURN, INHALATION HAZARDS

- Use caution when cleaning the cooktop. Some cleaners can produce noxious fumes if applied to a hot surface.
- Allow the cooktop to cool completely before applying any cleaning chemicals.
- To avoid steam burns, do not attempt to clean the cooktop with a wet sponge or cloth while the cooking area is hot.
- Follow instructions carefully to ensure burners are located and assembled correctly for proper combustion.

IMPORTANT: Do not wash burner grates, burner caps or burners in a dishwasher.

TO CLEAN COOKTOP

1. For best results and a prolonged cooktop life, clean the cooktop after each use. Before cleaning, ensure the cooktop, including grates and burners, are completely cool.
2. Remove burner grates, burner caps and burners. Dump any debris found inside burner. Handwash grates, caps and burners with warm, soapy water. To prevent corrosion, do not soak in water. For stubborn soils, use a plastic scouring pad or stiffy nylon brush. Dry thoroughly and set aside.
3. With burners removed, carefully wipe out any debris from inside burner openings with a dry paper towel, taking care to not push any debris, water or cleaning material into the hole in the brass orifice.
4. Clean stainless-steel surfaces with any general-purpose stainless-steel cleaner and follow the instructions provided by the manufacturer. Rub in the direction of the brushed finish and dry thoroughly to prevent corrosion and water marks.
5. Clean enameled surfaces and around burner bases with any general-purpose kitchen cleaner and follow the instructions provided by the manufacturer. Dry thoroughly to prevent corrosion and water marks.
6. Replace burners and burner caps onto the cooktop at correct locations and in correct orientation.

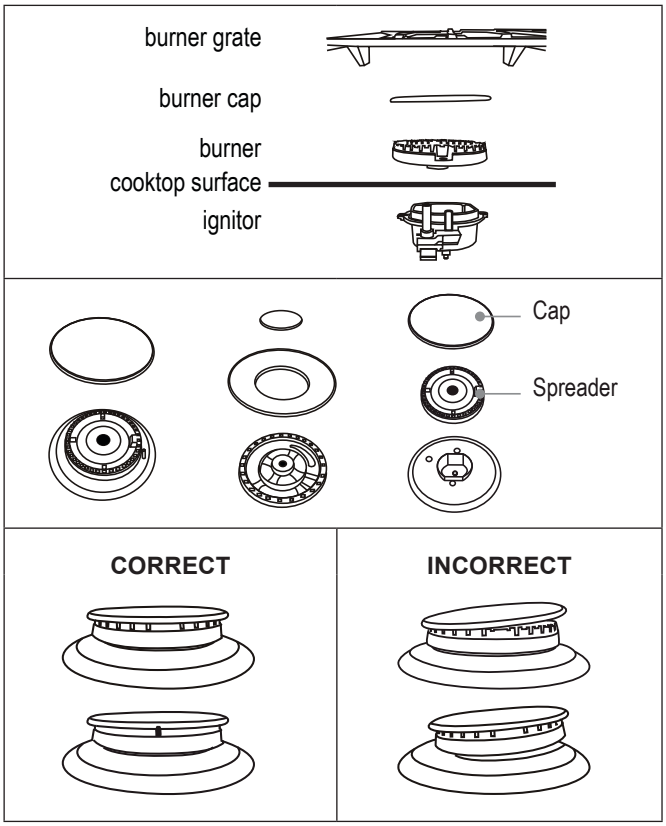

CONTROL PANEL CLEANING

▲ CAUTION ELECTRIC SHOCK HAZARD

- Do not use excessive water or cleaners to clean knob areas. Do not spray kitchen cleaners directly into the openings behind the knobs. If moisture is forced into openings behind knobs, there is risk of electric shock.

IMPORTANT: Do not use scouring pads, abrasive cleaners, strong liquid chemicals, steel wool or oven cleaners to clean the control panel, as these may damage the finish and cause cosmetic damage.

NOTE: The control panel and oven control can be disabled during cleaning by activating the Control Lock. Touch and hold **Control Lock** pad for 3 seconds to activate or deactivate Control Lock.

CLEANING AND MAINTENANCE

TO CLEAN CONTROL PANEL

1 For best results and a prolonged life, clean the user interface and control panel after each use. To remove knobs for easier cleaning, ensure knobs are in the **Off** position, then pull straight back with firm pressure to remove knob from stem.

2 Clean entire panel with a slightly damp, non-abrasive cloth, using mild soap and water. Glass cleaner can be used on oven control panel to remove streaks, and stainless-steel cleaner can be used on exposed metal to remove streaks.

3 Handwash knobs in warm, soapy water.

4 Replace knobs, taking care to align the profile in the knob to the stem shape to ensure a smooth fit and avoid damage to knob or control.

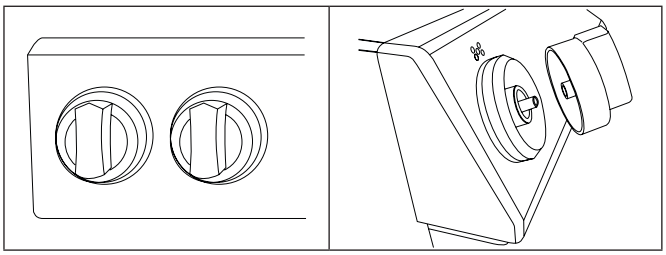

OVEN INTERIOR CLEANING

⚠ CAUTION **BURN HAZARD**

- Oven surfaces may be hot, and hot surfaces may create hot steam in a wet sponge or cloth when cleaning. Use caution to avoid contact with hot surfaces and if steam is evident, wait until the oven has cooled completely.

TO CLEAN OVEN INTERIOR

1 For best results and a prolonged life, check oven after each use for spills or spattering that require clean-up and wipe out interior with a slightly damp, non-abrasive cloth, using mild soap and water to remove light spills.

2 For moderate soil, use Steam Clean. For stubborn or heavy soil, use Self Clean. See pages 22 and 23.

OVEN LIGHTS

⚠ CAUTION **SHOCK, BURN, LACERATION HAZARDS**

- Disconnect power to oven and allow oven to cool completely before attempting to service light bulbs.
- Handle the glass lamp cover carefully. If the lamp cover is difficult to remove, do not force it, as it may break. Contact a qualified service provider for repairs.
- Never operate the oven without the glass lamp cover in place.

TO REPLACE OVEN LIGHT BULB

1 Locate oven lamps in the top of the oven, near the oven door.

2 Carefully unscrew the glass cover from the base. The light bulb can be removed by firmly pulling straight out from the light socket.

3 Replace the bulb only with G8 style 120V halogen bulb rated 25W or less.

4 Twist the glass cover back onto the lamp socket.

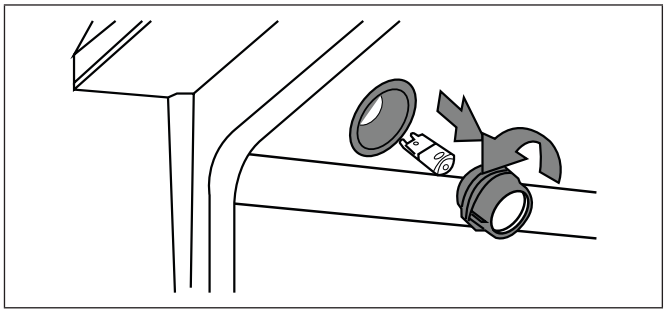

DRAWER AND DOOR

IMPORTANT: Do not allow excess water or cleaner to enter any holes or slots in the door.

TO CLEAN OVEN DOOR

1 Clean the door and drawer frequently to remove dust, spatters and fingerprints. Wipe door surfaces with a slightly damp, non-abrasive cloth, using mild soap and water.

2 For burned-on residue on interior door glass, use a glass cleaning compound and/or a razor scraper.

3 Clean enameled portions of the door interior with a non-abrasive sponge and soapy water.

4 Clean exposed metal portions with stainless-steel cleaner to remove streaks.

The oven door can be removed for easier cleaning, servicing or installation.

⚠WARNING FIRE HAZARD

- When reinstalling the oven door, confirm it operates and seals correctly. Heat escaping from around the door could ignite cabinetry if the door gasket does not seal completely.
- If the gasket is worn, frayed or damaged in any way, contact a qualified service provider for repair. To maintain proper door seal, do not rub or clean the door gasket, as it has a very low resistance to abrasion.

TO REMOVE OVEN DOOR

1 Open the door fully.

2 On both door hinges, flip down the lock mechanism. The lock will engage with the door when the door is moved as if it is being closed.

3 Rotate the door toward closed position, stopping when the door is about 2 inches from closed position.

4 Grasp the door firmly from both sides and lift the door up and away from the oven face. Do not lift the door by the handle.

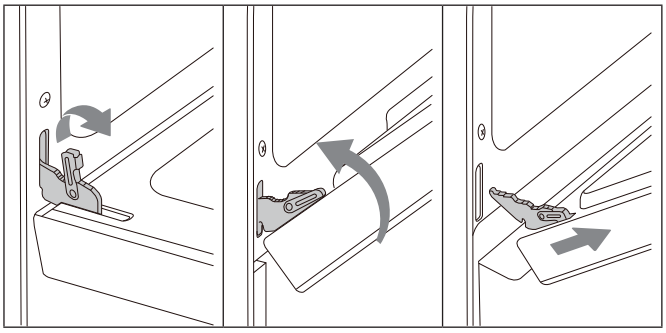

TO REPLACE OVEN DOOR

1 Holding the door firmly from both sides, align the door to the oven so the hinges slip back into the openings.

2 Rotate the door toward closed position, stopping when the door is about 2 inches from closed position. Allow the door to drop into the notches on the hinges.

3 Rotate the door until fully open and flip up the locking mechanism.

4 Ensure the door opens and closes correctly and is sealed properly. If the door does not operate correctly, remove the door and reattempt installation or contact a qualified service provider.

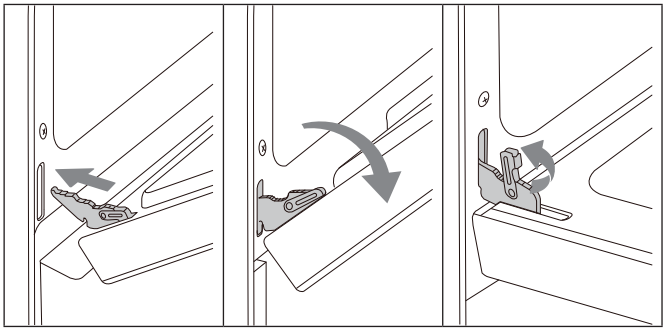

TO REMOVE DRAWER

It is not necessary to remove the drawer for cleaning, but if desired, it can be.

1 Fully extend the drawer.

2 Engage the release levers on each side while gently pulling on the drawer.

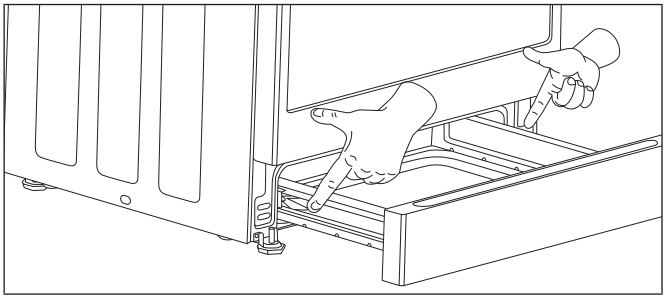

TO REPLACE DRAWER

1 Align the rails on the drawer with the slides on the range.

2 Gently push the drawer into place until fully closed. Open and close the drawer to ensure slide rails operate properly.

TROUBLESHOOTING

BEFORE YOU CALL

COOKTOP	
PROBLEM	**SOLUTION**
Burners do not light	**1** The appliance may be disconnected from the power source. If the Control Panel Display is not illuminated or does not respond to manual commands, check the following: • Power is connected at the circuit breaker. • The fuse is still functional and not blown. • The power cord is properly plugged in to a functional outlet. **2** If the Control Panel Display operates, check the following: • Gas shut off valve is in the ON position, and gas supply to the residence is on. • Burners and burner caps are properly positioned on cooktop. • Burner ports (openings around perimeter of burner top) are not clogged. • Igniters are clean, dry and sparking to the burners.
Unable to maintain a rolling boil or cook fast enough	**1** Improper cookware: Only use pans with flat bottoms that match the diameter of the cooktop burner in use. Adjust burner so flame does not extend beyond the edge of the pot. **2** Large pots and pans can lose significant heat from the top. Cover pans with a lid to retain heat better.
Flames around burner are uneven	Ensure burner cap is seated properly on burner and ports are not clogged.
Cooktop is discolored	Cooktop is not cleaned thoroughly.

OVEN	
PROBLEM	**SOLUTION**
Strong odor during initial use of new oven	This is normal and will disappear after one or two uses. To be careful, ensure all packaging has been removed from the appliance and check around door sides and inside drawer.
Clicking noise heard during oven operation	This is normal. The oven burner cycles on and off to maintain oven temperature, and when a burner turns on, the electric spark can be heard periodically for a few seconds, followed by the sound of the burner igniting.
Control Panel Display is dark and unresponsive	If the Control Panel Display shows only] or] [, the appliance is in Sabbath Mode. See page 14.
Control Panel Display is illuminated but unresponsive	Control Lock may be activated. Touch and hold **Control Lock** pad for 3 seconds to unlock. Alternatively, disconnect and reconnect power at the circuit breaker to reset.
Oven door is locked and will not open	If a Self Clean cycle has recently finished, this is normal. Wait for the oven to cool fully, then it will unlock.
Door will not close properly	Door is not installed properly. See page 27.
Drawer will not close properly	Drawer is not installed properly. See page 27.
Oven taking too long to cook	Adjust the oven calibration. See page 13.
Food is overcooked	Adjust the oven calibration. See page 13.
Food is not baking evenly	Ensure racks are in the correct position. See page 19.
Oven light is not working	**1** Oven light bulb may be burned out and need replacing. See page 26. **2** If the Control Panel Display shows only] or] [, the appliance is in Sabbath Mode. See page 14.
Oven will not start Self Clean cycle	If the oven was recently used or the cooktop is currently in use, this is normal. Self Clean can only be initiated when the oven is cool and the cooktop is not in operation.

OVEN	
PROBLEM	**SOLUTION**
Metal popping sounds during Self Clean cycle	This is normal.
Oven not clean after Self Clean cycle	After a Self Clean cycle, remaining ash residue must still be wiped out by hand. If black soil still remains, the oven may have been too heavily soiled for a single Self Clean cycle. Rerun Self Clean on the longest possible setting. Some areas, such as bottom door corners, may remain too cool to turn to ash and need to be cleaned by hand.
Convection fan runs in modes other than Convection Bake or Convection Roast	This is normal.
Hot air emitted from openings at back of cooktop	This is normal.
Smoke or steam coming from openings at back of cooktop	**1** It is normal for steam to be released from the oven vent. If the exhaust has no smell or smells like normal baking food, this is normal. **2** If the exhaust smells like burning food, check the food in the oven and ensure there is no spillage or spattering producing smoke. **3** If the oven is in a Self Clean cycle, this is normal. **4** If the exhaust smells like something other than food and residue burning, such as plastic or wood, turn off the oven and contact a qualified service provider.
Condensation on door glass	This is normal.
Cooling fan continues to run after oven is turned off	This is normal.
E + a number appears in the display	This is an error code. Touch **STOP/CLEAR** pad to clear the display and stop beeping. If necessary, reset power to the oven at the circuit breaker. If the error code remains or repeats, make note of the error code and contact a qualified service provider.

ERROR CODES

ERROR CODE	DESCRIPTION
ERROR-003	Lower cavity temperature RTD open circuit
ERROR-004	Lower cavity temperature RTD short circuit
ERROR-005	Communication failure between power board and UI board (no data feedback from relay board)
ERROR-006	Meat probe sensor short circuit
ERROR-008	Lower cavity door lock/unlock failure
ERROR-009	Normal heating mode temperature too high
ERROR-010	High temperature self-cleaning mode temperature is too high
ERROR-011	Communication failure between display board and power board (no data feedback from display board)
ERROR-012	Self-cleaning mode door was opened
ERROR-013	Wrong state of door lock in self-clean mode
ERROR-014	Cooling fan failure
ERROR-015	Ignition control board error
ERROR-016	Temperature calibration error
ERROR-017	Heating abnormal (continuous heating 20 Min, temperature rise less than 25F)
ERROR-019	Touch chip communication failure
ERROR-020 or **ERROR-030**	Relay board MCU self-check failure
ERROR-040 or **ERROR-050**	UI board MCU self-check failure

CONTACT US

If at any time you have questions or comments concerning your SHARP product, please contact the SHARP Customer Assistance Center. We are available to assist you through multiple contact methods for your convenience:

EMAIL
Available 24/7
US: sharpusa.com

See the Contact Us section on our sites

CHAT ONLINE

U.S. | https://support.sharpusa.com/s/

CALL US

US **800-BE-SHARP**
800-237-4277

Contact a Sharp Advisor on the phone

SHARP®

SHARP ELECTRONICS CORPORATION • 100 Paragon Drive • Montvale, New Jersey 07645 • USA
1-800-BE-SHARP (1-800-237-4277)